SECOND EDITION

CARTONS, CRATES *and* CORRUGATED BOARD

Handbook of Paper and Wood Packaging Technology

Diana Twede, Ph.D.,
School of Packaging, Michigan State University
Susan E. M. Selke, Ph.D.,
School of Packaging, Michigan State University
Donatien-Pascal Kamdem, Ph.D.,
School of Packaging, Michigan State University
David Shires, BA (Hons)
Smithers Pira

DES*tech* Publications, Inc.

Cartons, Crates and Corrugated Board, Second Edition

DEStech Publications, Inc.
439 North Duke Street
Lancaster, Pennsylvania 17602 U.S.A.

Printed in the United States of America
10 9 8 7 6 5 4 3 2 1

Main entry under title:
Cartons, Crates and Corrugated Board: Handbook of Paper and Wood Packaging Technology, Second Edition

A DEStech Publications book
Bibliography: p.
Includes index p. 561

Library of Congress Control Number: 2014958357
ISBN No. 978-1-60595-135-5

PREFACE

This book is intended to be a textbook for students in graduate and undergraduate university packaging courses. It describes the properties, manufacturing processes, function, specification, and design of wood, paper, paperboard, and corrugated fiberboard packages, beginning with the trees. It reviews the history of wood and paper-based packaging, and it explores the opportunities and threats of the future. The book's description and discussion of commonly-used tests and terminology make it a useful reference for practicing packaging professionals as well.

The book began in the lecture notes of some legendary MSU professors: Gary Burgess, Don Abbott, Dennis Young, Ruben Hernandez, Bruce Harte, Tee Downes, Hugh Lockhart, Gunilla Jonson, Pete Rafael, and Jim Goff. It reflects the School of Packaging's creation in 1952 in the MSU Department of Forest Products. It draws from the current literature of our field and from the assistance of MSU packaging alumni and others in the packaging industry. All chapters in the first edition (2005) were thoroughly reviewed by leading practitioners who are acknowledged there.

Ten years later, this second edition has updated chapters, more science, and two new co-authors. Dr. Pascal Kamdem, a scholar of Forest Products, adds depth to our understanding of the science behind the applications of wood in packaging. David Shires adds an international perspective from his experience (consulting and testing) in the British packaging industry and as Editor-in-Chief of the international research journal, *Packaging Technology and Science*. Recent research is cited to provide a route for the reader who wants to learn more.

We have also incorporated feedback from previous students in the two MSU courses for which the textbook is used, *Packaging with Paper and Paperboard and Packaging Materials*, and from instructors in other packaging education programs who have used the first edition. We have added metric units where they seem appropriate. Thanks to everybody for the great recommendations. Likewise, we welcome your recommendations for continual improvement.

DIANA TWEDE, Ph.D.
SUSAN E.M. SELKE, Ph.D.
Michigan State University School of Packaging

CHAPTER 1

Introduction and Historical Background

> *The brown paper bag is the only thing civilized man has produced that does not seem out of place in nature. Crumpled into a wad of wrinkles, like the fossilized brain of a dryad; looking weathered; seeming slow and rough enough to be a product of natural evolution; its brownness the low-key brown of potato skin and peanut shell—dirty but pure; its kinship to tree (to knot and nest) unobscured by the cruel crush of industry; absorbing the elements like any other organic entity; blending with rock and vegetation as if it were a burrowing owl's doormat or a jack rabbit's underwear, a No. 8 Kraft paper bag lay discarded . . . and appeared to live where it lay.*—Tom Robbins, *Even Cowgirls Get the Blues* (1976)

Packages made from paper, paperboard, corrugated fiberboard, and wood have a special relationship to life. Paper and wood hold the memory of life and offer the potential for recycling and resource renewal. They are transitory, like us, and their nature determines the unique properties of packages made from them.

But they are not all so plain as the brown paper bag. Paper and paperboard can also play well-dressed supporting roles in our economy. A distinctive feature is their ability to carry brilliant print. They contain, protect, and advertise all kinds of products, from cereal to electronic games. They have been responsible for the dazzling graphic display in retail stores for the past century, providing substrates for colorful brand and advertising communication on bags, cartons, and labels. The food pictured on a prepared food package can stimulate appetites and sales. The information can instruct and save lives.

The roles played by wood and corrugated fiberboard are less glamorous, but no less significant. The wooden pallet is a standard shipping platform, and corrugated fiberboard boxes are the shipping containers of choice for most products in many supply chains in the world today. Efficient transport, material handling, storage, and inventory control depend on their strength, dimensions, and printed symbols.

Paper and wood are the basis for the most widely used packaging materials in the world. They are particularly significant in North America, with its abundant forests and well-developed paper industry, where they represent about half of the weight (and one-third of the value) of all packaging materials used.

This book describes the properties of wood, paper, paperboard, and corrugated fiberboard, and explores their use as packaging materials. It describes the manufacturing process for materials and packages. It discusses commonly used tests, terminology, and design principles.

This introductory chapter provides some historical background and current statistics. Paper and wood are significant materials in the history of packaging. They have played a key role in the development of the United States and its commerce, and commercial growth, in turn, has stimulated more packaging developments.

The historical background that follows is useful for two reasons. First, it helps us to understand the industry's vocabulary. Since the use of wood and paper is so old, many processes and specifications have a historical basis. For example, the designations for corrugated board flute grades A, B, and C have no relationship to their order of size, but are related to the order in which they were introduced. On the other hand, names like "pinch bottom open mouth" have a very specific meaning to the bag industry, and names for common measures like "ton" derive from historical names, and it is useful to know why. Understanding the source of our wood and paper vocabulary helps to remember what everything is named.

But the most important reason to study our packaging history is to remember that we are heirs to a craft and industry that continues to change. Package materials and forms come and go based on available technology, resources, and demand.

For most of humankind's history, some packages have been made from wood and fiber. There have been marvelous and useful innovations. Baskets were invented over 12,000 years ago. Paper was invented only 2,000 years ago (and for half of that time the process was a secret known only in Asia). The use of wood fibers is even newer, only 150 years. We've used corrugated fiberboard for about 140 years, and paper/plastic laminations for only the past 60 years.

Paper and wood are used in packaging in higher volume today than ever before, and will continue to play a role in the future, because trees are a plentiful, natural, renewable, biodegradable resource.

What will the future hold for wood- and paper-based packaging? You, the packagers of the future, will be the ones to decide. This textbook shows how paper and wood will continue to be part of that future.

1.1 WOOD PACKAGING HISTORY

Wood and woody fibers are among the oldest packaging materials. Early humans used hollowed-out pieces of wood and gourds, as well as reeds, leaves, and clay as packaging materials. Soon the use of wood and fibers extended to the weaving of baskets.

1.1.1 Baskets

Older than the weaving of cloth and more ancient than the early ceramics, the interlacing of twigs into baskets first occurred during the Neolithic period, contemporary with the first arrowheads (Bobart 1936). Early men and women used baskets for gathering food, carrying goods, and for ceremonial and decorative purposes.

Evidence of early basket use can be found in all parts of the world. However, very little ancient basketry has survived because of its tendency to biodegrade. Baskets as artifacts have been found primarily in arid places like Egypt (dated 10,000–8,000 B.C.) and the North American Southwest (about 9,250 B.C.). But there is plenty of evidence from secondary sources. The first Sumerian priest-king of Babylon in 3,000 B.C. was depicted carrying a basket on his head. Early "corn mother" harvest festivals from Egypt to Peru to Borneo employed the basket symbol.

Baskets have much in common with other packages throughout history. They were made from the least costly materials available. Whatever suitable fibrous material was at hand could be used, ranging from parts of a tree—twigs, split wood strips, leaves, palms, bark, roots, and willows (the Roman osier)—to grasses, reeds, straw, and bamboo. Furthermore, the techniques of *twining*, *coiling*, and *plaiting* were well-developed; basket-work was used for other household and functional items.

Like other packages, form followed function. Basketry's flexible construction methods invited variations in shapes and styles. Creative basket makers developed many designs that were cleverly adapted to each use.

Most of the packaging functions served by early baskets were related to food. Hunters and gatherers used baskets for collecting the food and for carrying leftovers to the next nomadic location. The transition to crop cultivation was accompanied by the development of special baskets for planting seeds, harvesting, winnowing, sifting, and storage, with different shapes for each activity. For example, harvest baskets must be large; winnowing baskets are shallow; and storage baskets are tightly woven with lids.

Baskets played an important role in distribution from the very earliest trading and markets (Sentance 2001). Traders carried goods to market in baskets designed to be lightweight and ergonomic. Some were designed to be bal-

FIGURE 1.1. *Basket designed for back packing, South Vietnam circa 1950. From the collections of the Michigan State University Museum.*

anced atop a person's head, shallow with a low center of gravity. Others were designed to be carried on a person's back; in the interest of stability they were longer than they were wide, and they had straps that were supported by the shoulders, chest, or forehead (see Figure 1.1). Pannier baskets carried by a beast of burden usually came in a pair, one slung over each side. The first "crates" used for shipping were wicker hampers (the word, like "cradle," derived from the Roman *cratis*). Glass and ceramic vessels were sometimes protected by basketry.

Baskets used for display in markets were (and still are) shallow to allow a clear view of the produce. Baskets used by shoppers to carry home the goods had/have handles that can be carried with a hand or by an arm, as shown in Figure 1.2.

Asian packagers added other woven forms to the functional theme. There were many clever shapes of intertwined wrappings, specific to the product and the materials at hand. Traditional Japanese packaging even had the reputation for endowing its contents with symbolic meaning. For example, a holder for five eggs made from intertwined wisps of rice straw ingeniously uses a farmer's natural resource to form a strong and functional package that also enhances the feeling of the freshness and warmth of newly laid eggs (Oka 1975).

A notable basket-like open crate was traditionally used in England for shipping pottery. Made from *withies*, a name used for willows, the crates were fashioned with *round-stick joinery*, twisted into an interlocking open framework with upright hazelwood rods and horizontal branches ranging from one

FIGURE 1.2. *Early Southeastern American wicker basket designed for shopping. From the collections of the Michigan State University Museum.*

to two inches thick. The pottery was protected by straw that had been stuffed in and around it. The crates were strong and resilient, and the structure gave them the ability to absorb shocks. Making them was a craft that required 5–7 years of training. At one time there were 40 firms, employing about 350 journeymen and 150 apprentices in Staffordshire (Castle 1962). The withie crate is just one example of the myriad creative basket-like package forms that have been crafted throughout history, and an example of a package whose time has come and gone.

Baskets are still used in some supply chains that are short and local, where the baskets are re-used. The familiar *bushel basket* made from splints of wood is still widely used to harvest and bring fresh produce to farmers' markets in the United States, and has long been used as a unit of volumetric measure for marketing purposes. In many parts of the world, baskets are still used for distribution of fresh food ranging from melons to live chickens.

1.1.2 Barrels (Casks)

Wooden barrels made from *staves* were invented during the time of the Romans and have been used for over 2,000 years. Barrels were arguably the most significant shipping container form in history.

In the United Kingdom, *cask* is the general term and *barrel* refers to a specific size and shape. In the United States, the word *barrel* is used to refer to all cylindrical wooden containers with a bulging bilge. Both terms are used interchangeably in this book. (*Keg* refers to a specific size of barrel. The word *drum* is used for straight-sided containers made from steel, plastic, or fiberboard.)

Barrel-making may have developed concurrently with ship building technology. Materials, modes of construction, and tools are similar: thin *staves* of wood, bent to curved shapes in the presence of heat and water, are precisely fitted and bound together (Elkington 1933).

The shape was ideal for the logistical systems in which they were shipped. The bilge shape makes it easy to roll with little friction and easy to pivot into position; a single person can handle much more than his or her own weight. They can be transported on a simple wagon chassis, and they are easy to load into a ship using simple fixtures for rolling or lifting. They also fit nicely into ships' holds in the *bilge* and *cantline* arrangement shown in Figure 1.3. The shape is very strong, and uses the properties of the wood to their best advantage.

For the Romans, casks served as substitutes for an older type of shipping container, clay transport amphoras (Twede 2002). They were used to ship liquid products like wine and olive oil, and other goods from the northern parts of the Empire where wood was a more abundant natural resource than clay. Casks were more convenient, lightweight, easy to transport, and not subject to breakage like pottery.

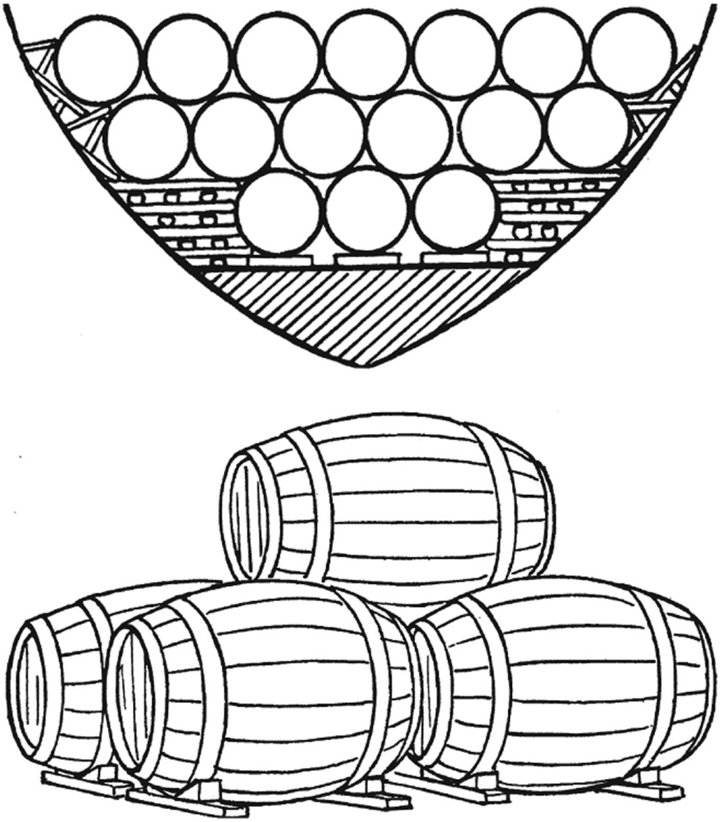

FIGURE 1.3. *Bilge and cantline stacking pattern; stowage aboard ship. Reprinted with permission of Cornell Maritime Press, from Garoche,* Stowage, Handling and Transport of Ship Cargos *(1944).*

By the time of the Crusades, the cask was the primary European shipping container form. Casks carried supplies for the knights seeking the Holy Grail. In the Middle Ages and the Renaissance, the most common cargo, especially in the Mediterranean where most sea trade was conducted, was wine in casks called *tuns*, which became a standardized unit of volume measure for the purpose of import tax collection. (The derivative *ton* measure has, over time and various circumstances, indicated either weight or volume. A ship's *tonnage* was originally the number of tun-sized barrels that it could carry.)

A barrel-maker is called a *cooper*, and in the middle ages, coopers' *gilds* (also spelled *guilds*) formed all over Europe. Such medieval gilds were the first trade unions, and oversaw the training and apprenticeship of new tradesmen for all types of production. The Worshipful Coopers Company of the City of

London was a typical minor livery "company." It and its Gildhall still exist as a social club, but today has little connection to casks.

The Worshipful Coopers Company of the City of London worked with the government to standardize casks and influence the market (not unlike today's packaging trade associations). A 1420 city ordinance required every cooper to brand his barrels with a distinctive mark registered at the Gildhall, an early form of packaging quality assurance. The Gild instituted an inspection and certification regime to combat fraud and imports. In 1501 a Royal Charter granted by Henry VII incorporated the Coopers as a fraternity-in-Gild forever. It was most active in the 1500s and 1600s, when it lobbied to raise the government's fixed price on casks, fought vertical integration whereby brewers tried to employ more than two of their own coopers (the legal limit), and supported the rebellion against the King by the Lord Mayor of London and Parliament. They standardized the hogshead at 52.5 gallons and wine cask at 31.5 gallons under the authority of Richard III, and under Henry VIII they set standards for beer barrels. They also set standards for so-called *slack* barrels that contained dry products like gunpowder and soap, based on weight (Elkington 1933; Foster 1944).

Some gild traditions, like commemorating the completion of an apprenticeship, continued into the twentieth century. The education and apprenticeship of these coopers was as comprehensive in its way as our modern packaging education. The completion of an apprenticeship was celebrated in a ceremony called the *Trusso*, which bears a vague similarity to some of our own zany graduation rituals. As a final exam, the apprentice was required to make a cask; the process was graded by a Master Cooper, a member of the coopers' union and a gild member. If the apprentice "passed" the test, he was placed inside the still-warm barrel, doused with water, shavings and ashes poured on his head, and then the barrel was rolled down the street with the cooper still inside. The procession ends at a party where he "dispenses hospitality" and receives his certificate of service (Elkington 1993; Hankerson 1947; Gilding 1971), as shown in Figure 1.4.

The history of the London coopers gild illustrates the widespread nature of the trade. There were coopers dispersed throughout the city and suburbs, usually making barrels for a single product like beer, wine, flour, or fish. There were coopers working throughout supply chains, repairing (*recoopering*) casks whenever they leaked. Ship's coopers kept the cargo in sound condition; dock coopers supervised the quality of the cargo as it was unloaded, and bond coopers inspected cargo stored in customs warehouses and vaults. "Sound condition" was an apt description, because a cooper could tell, just by the sound of a mallet tap, whether a cask was full (Gilding 1971).

By the 1600s, princes along the Rhine were competing for who had the biggest, most ornately carved barrel (filled with wine "tax" from his peasants).

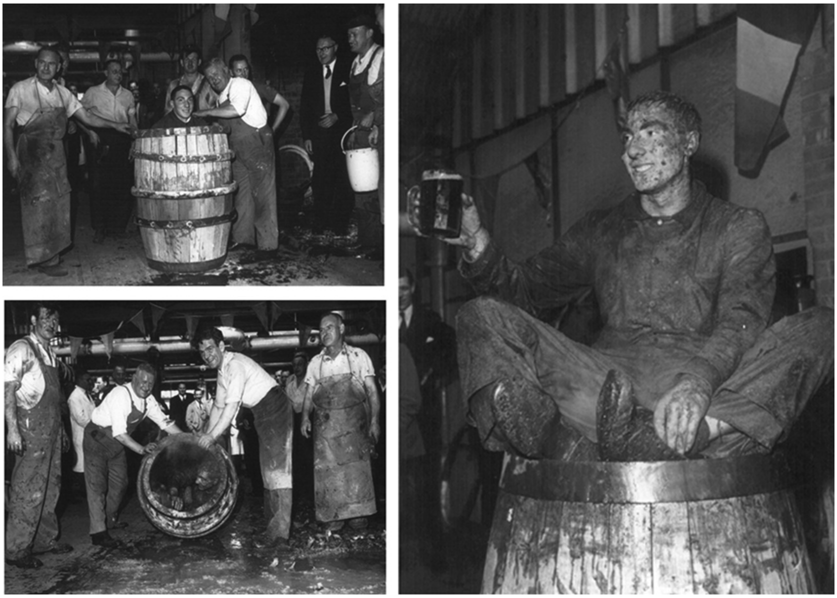

FIGURE 1.4. *Master Cooper initiation ceremony and Trusso or David J. French in 1955. Photographs courtesy of Mrs. Janice Freeman.*

The largest and most famous was in Heidelberg, filled for the first time in 1752 with 50,000 gallons of wine (Hankerson 1947). The *Heidelberg Tun* (which still exists) was so famous that over 100 years later writers like Herman Melville and Mark Twain could still refer to it without needing to explain.

In America, coopers were likewise hard at work, although they were less well organized. The colonies were supplied with goods packed almost entirely in barrels. The Nina, Pinta, and Mayflower carried casks of water, biscuits, meal, meat, vegetables, and gin. The Mayflower hired America's first cooper (John Alden) to come with them and brought cooperage tools so that the pilgrims could make the essential containers themselves.

Colonization in America stimulated demand. The colonists needed fish, meat, sugar, tobacco, shoes, and hardware. More colonists came, and made products like soap, butter, candles, cider, and syrups. Each new product increased the demand for barrels and coopers.

Barrels were especially necessary for American exports. The first ships returning to England carried barrels of salted codfish. American barrels carried two-thirds of the high volume triangle trade, bringing molasses from the Caribbean islands to Boston and Newport where it was converted into rum that, in turn, was shipped in barrels to England and other destinations. Exports of rice and Virginia tobacco stimulated the earliest demand for *slack barrels*. The heavily forested American colonies even exported staves to be fabricated into barrels elsewhere, in England, Ireland, Spain, and Portugal (Coyne 1940).

Whale oil, used for candles and lamps, was another early American commodity. The whales were "processed" and barrels were filled on board. Whaling ships had at least one cooper to oversee the operation (Howard 1996). Melville's description makes vivid the dramatic role (roll) of the casks:

> *While still warm, the oil, like hot punch, is received into the six-barrel casks; and while, perhaps, the ship is pitching and rolling this way and that in the midnight sea, the enormous casks are slewed round and headed over, end for end, and sometimes perilously scoot across the slippery deck, like so many land slides, till at last manhandled and stayed in their course; and all around the hoops, rap, rap, go as many hammers as can play on them, for now* ex officio*, every sailor is a cooper.*—Melville (1851)

Barrels supplied the American military, from George Washington's band of rebels through the War of 1812, the Civil War, and the two World Wars. They appeared in pirate booty and Niagara Falls stunts. They filled the westward wagon trains with water, nails, china, food, oil, gunpowder, and beer.

Coopering remained a hand operation until 1837 when machinery was first developed for cutting and dressing staves. Economies of scale improved even more when the machinery for assembling them was developed over the next 30 years. The discovery of oil in Pennsylvania and New York (and later in Ohio, West Virginia, California, and finally, Texas) created a huge demand for oil barrels and mechanization. Large cooper shops sprang up in the oil regions to get the black gold to refineries and then to market. New and rapidly growing industries like meat packing, brewing, distilling, flour milling, and corn products stimulated more growth (Coyne 1940).

Mechanization, however, produced barrels of inferior quality. Unlike the coopers who matched their staves from the cylindrical shape of the tree, the power saws cut straight lines that could not be so effectively shaped. The ability to make barrels that were leak-proof was somewhat improved with glue and other lining materials like silicate of soda (for oil-based products) and paraffin (for water-based products).

Furthermore, the barrels' geometry, and the fact that they had to be shipped by rail standing up, did not fit into or onto railroad cars as well as they had fit into ships where they lay on side, packed tight like fruits. About 1870, the first tank cars (wooden tanks on flat cars) for oil were developed to replace leaky barrels. Other substitutes like steel drums followed, but not right away.

Even flour was still packed in 196-pound barrels in Minneapolis mills up until the early 1900s, at a time when wood and woodworkers were more plentiful than textiles for bags. Henry Chase and John Batchelder developed a machine to sew bags in 1849 (based on Elias Howe's first sewing machine in

1846). But in 1880, barrels still outnumbered bags by ten to one. Bags were most successful in smaller sizes like 24-1/2 pounds, which is one-eighth barrel, cross-referencing standard barrel quantities even when there was none (Steen 1963).

By the early 1900s, barrels began to lose market share to consumer packages (Twede 2005). The cracker barrel was soon seen as old-fashioned, a symbol of a bygone era. The famous water-resistant Uneeda biscuit package symbolized the birth of the consumer packaging industry, and most retail merchandise quickly moved into consumer packages, as described in Section 1.2.3.2.

Oak barrels are still used for aging wine and whisky, and as such are valued for the nuances of flavor they impart. The principles of their construction are described in Chapter 4. But in the United States, most liquid products have long ago moved to alternative semi-bulk shipping container forms, such as steel and plastic drums and tanks, as technology became available. Most dry granular products moved to bags. And for shipping everything else, the better alternative was boxes.

1.1.3 Wooden Boxes to Pallets

There have probably been wooden boxes for as long as there have been carpenters. The shape is simple and easy to form. *Chests* were used for personal belongings, as people traveled, and later as furniture at home (like the so-called chest of drawers). But the use of wooden boxes as routine shipping containers is relatively recent, with a notable exception: tea chests.

The first widespread use of wooden boxes was for tea, shipped from China by the East India trading companies beginning in the late 1600s. Tea chests were made from thin planed wood, and later were the earliest use of plywood. They were lined with lead (later aluminum) to keep the tea free from damp and foreign odors, with a paper barrier between the lead and the tea. For the better teas, painters “adorned the exterior with grotesque flowers and fanciful devices.” The chests were filled and coolies (Chinese workers) stamped down the tea with their feet to compress it and maximize the cube utilization. Finally the chests were sewn up in rough matting and secured with rattan. Every chest had two paper labels, one inside the burlap and the other outside, which named the ship it was to travel on (Goodwin 1991).

Weights varied, but by the mid-1800s, the standard tea chest was reduced to 100 pounds, a weight that was capable of being manually handled. They were dimensioned to perfectly fit the hold of clipper ships, as shown in Figure 1.5. A pair of workers loaded the ship tightly, chests chock-a-block, from the outer hatch wings inwards, hammering in the final center chest in each layer as if it were a keystone of an arch, with a wooden mallet. This maximized the amount of cargo and minimized the amount of shifting in transit as the ship swooped and shuddered under pressure of the sea and sail. Although tea is mostly now shipped in bags, standard specifications for tea chests are still used; now they are sized to fit pallets and 40-foot ocean containers (Forrest 1973).

"The ubiquitous tea chests" evolved into the symbol of Britain's wealth and expanded trade influence in the East. Millions of the original "Useful Box" were sent to tea-crazy England over 300 years, where they have a reputation for being reused for moving households and for storage. "The attics of England creak beneath their collective weight," (Goodwin 1991).

The chests were also sent to the colonists in America, who found their symbolism to be more useful than their function. For the Boston Tea Party crowd who dumped them overboard in 1773, the chests symbolized taxation without representation, and the collective act of destroying them with tomahawks and dumping them overboard was the catalyst for the American Revolution.

For other products, widespread use of wooden boxes did not become common until the Industrial Revolution, coinciding with the development of sawmills, railroads, and an increase in trade (Marquis 1943). Earlier, wooden boxes had not been widely used as shipping containers because of the high cost to transport and handle them. They were heavy (especially when loaded with something more dense than tea) and awkward to handle. Trans-loading boxes

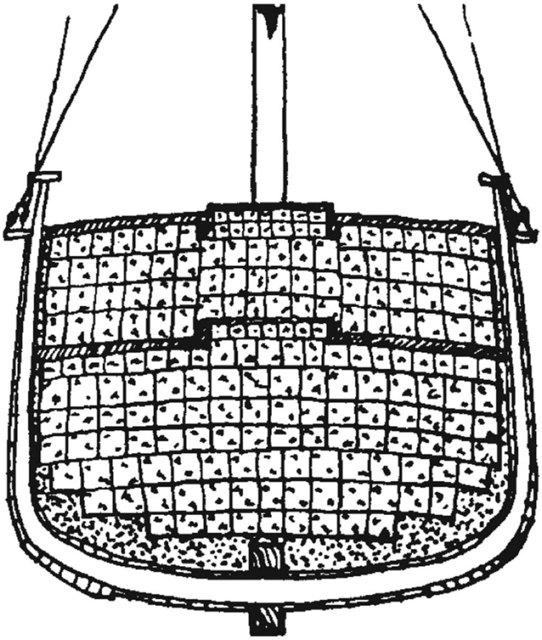

FIGURE 1.5. *Tea chests in the hold of a clipper ship. Reprinted with permission of Conway Maritime Press, from MacGregor,* The Tea Clippers *(1972), 17.*

from one transport conveyance to another is difficult, especially compared to cylindrical casks which could be rolled.

This is a classic case of how geometry relates to the history of transport and packaging technology. The advent of railroad transport created concentrated hubs of material handling and therefore the opportunity to mechanize it with the use of hoists and wheeled conveyances. This made it possible for economical wooden boxes to displace barrels for many dry commodities and manufactured goods shipped by rail. At the same time, *boxcars* were developed to ship the boxes, creating the squared-off world of distribution that now dominates in all transport modes. Plaskett (1930) calls wooden boxes "the first modern shipping container."

Box making in the United States was at first a completely local industry, utilizing readily available local timber made for local users. A mutually beneficial relationship developed between the box and railroad industries, since the railroads had been granted much timber land that could be made into boxes. Sawmills, first established for making railroad ties, later specialized in making boxes or planing wood for other box factories.

Boxes are much more economical to make than cylindrical barrels, and the process was more successfully mechanized. The introduction of the *band resaw*, which slices thin boards, made it possible to produce box parts known as *shooks*, to be assembled in the user's *box room*.

Productivity was improved by using power planers, matching machines, squeezing machines for tongue and groove work, nailing machines, and stapling machines. The size and number of box factories increased steadily between 1860 and 1910. At the same time, demand rapidly increased for rail shipments, creating a tremendous stimulus to the box industry during the closing years of the 1800s (Marquis 1943).

In the United States, the box and railroad industry trade associations (National Association of Wooden Box Manufacturers and Association of American Railroads) worked together with the USDA's Forest Products Laboratory (which was developed by the industry in 1910) to establish standards for wooden box construction, and later for corrugated boxes. The standards were intended to minimize damage in transit.

In the history of shipping containers, compared to amphoras, baskets, and barrels, the American wooden box had a relatively short life cycle. They were most widely used as shipping containers from the mid-1800s to the 1920s when they were displaced by the newly invented corrugated and solid fiberboard shipping containers.

Corrugated fiberboard boxes quickly gained markets because they used less material, were lighter weight, and were more economical to ship in a knocked-down fashion to the packer-filler. The decision of the U.S. Interstate Commerce Commission to permit their use in 1914, coupled with their low cost and the growth of motor carrier transport, signaled the end of the predominance of the hardy wooden box (Howell 1940).

Wirebound boxes made from thin veneer plywood were an intermediate solution for some products such as plumbing fixtures and iced produce. They offered some of the same advantages as corrugated fiberboard boxes since they could be mass-produced and shipped knocked down, but they were sturdier. The industry developed other hybrid packages made from plywood with cleats and hinged corners. Some of these are still used, and are described in Chapter 4.

The wooden box and barrel industries in America slowly faded for all but military and other specialized extreme uses. The industrialization that had so successfully mechanized and increased the production of wooden boxes, in the end created their strongest competition: the totally mechanized production of corrugated fiberboard shipping containers. Some of the uses that persisted the longest were for regional distribution of farm commodities such as eggs and bottles of milk, soft drinks, and beer, where the boxes were returned and reused.

Fresh fruits and vegetables were still shipped in wooden boxes into the 1950s, and produce boxes had regional standards: for example apple boxes were 1-1/5 bushel for soft varieties in New England and 1-1/8 bushel in other parts of the East.

Packing for export has been another persistent application. Wooden boxes predominated in ocean shipments until the 1970s when the use of containerization (e.g., 40-foot ocean containers) became commonplace. For non-containerized shipments, wooden boxes are often still required in order to withstand the rigors of break-bulk ship loading and stowage. Wooden boxes, especially cleated plywood and wooden crates, are still used for heavy and large products and in “extreme” applications such as military shipments of equipment and supplies. Crates (which differ from boxes because they are only frames with open sides) were used until the 1950s for appliances, and are still used for some large equipment. Their construction is described in Chapter 4.

But even as World War II signaled the demise of the wooden box and barrel industries, wooden packaging was simultaneously reborn with the concept of unit loads. Wooden pallets were key for the logistics needed to provision the two war fronts (Europe and the Pacific) simultaneously.

Prior to the 1930s when forklifts were invented, shipping containers were all handled manually or with the use of small wheeled hand trucks. The invention of forklifts and the creation of pallets and skids for unit loads revolutionized material handling. During WWII, the U.S. military bought more than 50 million wooden pallets and skids to move the materials of war (LeBlanc and Richardson 2003).

In the decades after WWII, forklifts mechanized material handling throughout the commercial world, creating a large demand for wood pallets. Most of the material handling in the world today takes place with the use of pallets. Once again the geometry of transport and packaging changed, this time to focus on optimizing the cube of palletloads.

Because of the demand for pallets, there is more wood used for packaging today than ever before. Even with increasing competition from plastic, pallets are still the highest-volume category of wood packages in use because of their low cost, durability, and low-tech ease of repair. The principles of their construction are described in Chapter 5.

Wood packaging was also responsible for the creation of the first university degree-granting program in packaging, which in turn is responsible for the writing of this book. When Korean War boxes were found to be deficient, Michigan State College introduced a program in Packaging in the Department of Forest Products in 1952, to provide education and research in the performance of wood and corrugated fiberboard boxes. That idea grew into the School of Packaging at Michigan State University, the leading Packaging degree-granting program in the United States (and this story explains why our program is in MSU's College of Agriculture and Natural Resources).

But even as the types and uses of wood packaging have declined, its valuable properties and favorable economics have not. Wood's strength and renewable nature are also responsible for the success of the paper-based packaging forms discussed in Chapters 11–15.

1.2 PAPER-BASED PACKAGING HISTORY

The most significant role of wood in packaging today is the use of its fibers for the raw material for paper and paperboard. But wood fibers have been used for only a short part of the 2000-year history of papermaking.[1]

A persistent theme throughout history is that packaging is made from the lowest cost materials. But most paper was, for a long time, too expensive to use for packaging. It was hand-made from rags for 17 centuries after its invention. Paper use was hindered by the laborious process of papermaking and the limited supply of raw materials until the invention of processes for pulping straw, wood, and waste paper in the mid-1800s. The ability to make paper from abundant natural resources has made it the inexpensive commodity with the wide range of packaging uses that it is today.

The earliest paper-like material used for packaging was *papyrus*, used as a

---

[1] The history of papermaking is well documented, especially with respect to printers' paper. Unless otherwise noted, most of the facts in the papermaking sections are found in Hunter 1947, Hills 1988, Weeks 1916, and Bettendorf 1946, although these are not referred to throughout the text. It should also be noted that in some cases reported dates vary by a couple of years from each other since inventions and new equipment installations take place over time, and only patent issue dates are documented.

CHAPTER 3

Structure and Properties of Wood

The chemical and physical structure of wood determines its properties as well as the properties of the paper-based materials made from it. Wood has a fibrous nature, with long, hollow, sap-filled cells and *grain* arranged parallel to the trunk of the tree. The characteristics and arrangement of the fibrous cells affect its strength and reaction to changes in humidity.

The walls of the fiber-shaped cells are made from cellulose and hemicellulose. The fibers are surrounded by lignin, an intercellular material that “glues” the cells together. This structure makes trees tall and strong. It also gives strength to wood.

Wood fibers are good for papermaking because the process of wood pulping frees the fibers from the inter-cellular lignin so that they can be rearranged into another useful shape, like a sheet. Although pulping causes considerable changes in the physical macrostructure of the wood, there is much less change in the structure of the fibers themselves.

3.1 CHEMICAL STRUCTURE OF WOOD

The wood cell walls contain *lignin*, *hemicellulose*, and *cellulose*. Hemicellulose and cellulose are carbohydrates and are the major chemical components. Cellulose predominates, with about 50% by weight. Lignin is not a carbohydrate. As shown in Figure 3.1, there is over twice as much cellulose and hemicellulose as lignin.

The amount of cellulose, hemicellulose, and lignin varies with species, location within the tree, climate, age, and exposure of the wood. The relative proportions of these three constituents also differ with the position within the cell wall. In general, softwoods have more lignin than hardwoods, as shown in Table 3.1.

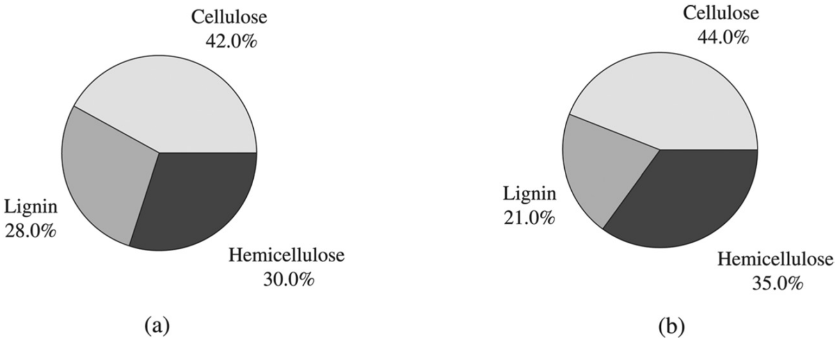

FIGURE 3.1. *Typical composition of (a) softwood and (b) hardwood.*

Wood contains 49% elemental carbon, 44% oxygen, 6% hydrogen, less than 0.5% nitrogen, and traces of other elements (Fengel and Wegener 1983). In addition to cellulose, hemicellulose, and lignin, wood also contains a variety of other chemical components known as extractives and inorganic non-combustibles known as ash, most in very small amounts (Table 3.2).

3.1.1 Cellulose

Cellulose gives wood its strength. It is a linear homopolymer of glucose residues joined by β-1-4 linkages (β-D-glucopyranose), as shown in Figure 3.2. It has an extremely high molecular weight. Cellulose can be represented by the chemical formula $(C_6H_{10}O_5)_n$, where n is thought to be about 10,000 (Bowyer *et al.* 2002).

Cellulose has very strong intramolecular (within the molecule) and intermolecular (between adjacent molecules) hydrogen bonding, and exhibits a high degree of crystallinity. Because of the extent of hydrogen bonding, cellulose also tends to interact strongly with water, and hence is primarily responsible for the tendency of both wood and paper to sorb water and change dimensions on exposure to changes in humidity.

As a tree grows, the cellulose molecules are arranged into long oriented,

TABLE 3.1. Chemical Composition of Softwoods and Hardwoods.

Component	Softwoods (mass percent)	Hardwoods (mass percent)
Cellulose	40–44	40–44
Hemicellulose	20–32	15–35
Lignin	25–35	18–25
Extractives	0–5	0–10

TABLE 3.2. Elemental Composition of Wood (Fengel and Wegener 1984).

Element	% Dry Weight
Carbon	49
Oxygen	44
Hydrogen	6
Nitrogen	> 0.1
Ash content*	0.2–0.5

*Ash content in some tropical species is close to 5% (Nzokou and Kamdem 2006).

thin crystalline strands called *fibrils*, which in turn make up the cell wall. Cellulose's crystalline nature (estimated to be up to 70%) makes it resistant to chemical attack during the pulping process as it is liberated from the lignin "glue" leaving fibers that can be reformed into a sheet of paper. Cellulose gives paper its strength and flexibility, as well as its sensitivity to water.

3.1.2 Hemicellulose

Hemicellulose plays a more important role in papermaking than it does in wood properties. Like cellulose, it is a condensation polymer formed from sugar residues. However, hemicelluloses are actually copolymers, rather than a pure homopolymer like cellulose. Rather than a linear crystalline structure, it is irregular, commonly containing short side-chains, and is sometimes heavily branched. It also has a much lower molecular weight than cellulose.

The monomeric units commonly found in wood hemicellulose are glucose, mannose, galactose, xylose, arabinose, 4-O-methylglucuronic acid, and galacturonic acid residues. Hemicellulose is predominantly amorphous, with a degree of polymerization ranging from 100 to 400 (Walker 1993).

Because of its lower molecular weight and amorphous nature, hemicellulose is much more readily hydrolyzed and soluble than cellulose. It plays a less significant role in wood properties than either cellulose or lignin.

But in paper, hemicellulose forms some of the "flesh" that fills out the paper between the longer cellulose fibers. It makes a smoother, more printable

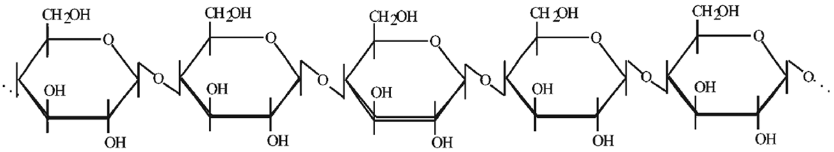

***FIGURE 3.2.** Cellulose.*

surface. It increases the tensile, burst, and fold strength of paper, and increases pulp yield. The starch that is often added to pulp as a binder has a very similar effect to hemicellulose (Bierman 1996).

3.1.3 Lignin

Lignin acts to protect the cellulose and imparts compressive strength, rigidity, brittleness, and some degree of resistance to various types of physical, chemical, and biological degradation. Half of the lignin is in the cell walls and is linked to hemicellulose and cellulose; the other half can be regarded as the glue that holds the fibers together. Lignin makes the cell walls hard, renders wood indigestible, and makes trees resistant to cold.

Lignin is a highly complex, three-dimensional aromatic condensation polymer of very high molecular weight. It is a totally amorphous polymer, formed by non-selective free radical addition and condensation processes that yield a random structure.

Lignin is formed from hydroxy- and methoxy-substituted phenylpropane units (Figure 3.3). Softwood lignin has a molecular weight estimated at 90,000 or more. Hardwood lignin has somewhat lower molecular weights (Walker 1993).

The main goal of chemical pulping is to remove lignin, freeing and purifying the fibers for the papermaking process. Since lignin is susceptible to UV degradation, mechanical pulping methods that do not remove it result in paper that yellows upon exposure to light due to the oxidation of the residual lignin.

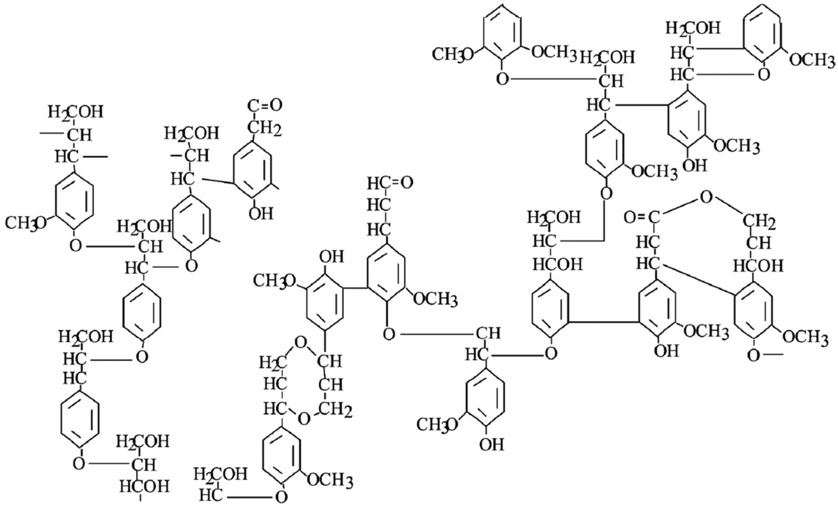

FIGURE 3.3. *Portion of a lignin molecule.*

3.1.4 Other Components

A variety of other components are found in wood in small amounts. These are not structural materials.

Organic components such as tannins, phenolic compounds, terpenes, fatty acids, resin acids, waxes, gums, and starches contribute to color, odor, decay resistance, density, hygroscopicity, and flammability. These are classified as extractives because they can be removed from wood by extraction with solvents. There are also trace amounts of non-combustible compounds containing inorganic calcium, sodium, potassium, silicon, and magnesium, known as ash components.

The total amount of extractives typically ranges from about 1% to 18% dry weight, and is dependent on species, growth conditions, time of year, and several other factors. In some cases like tropical species, extractives content can be as high as 30%. Many extractives serve to protect wood against biological degradation, by their toxicity to certain biological organisms. The higher concentrations of extractives in heartwood compared to sapwood are largely responsible for the greater decay-resistance of heartwood. The extractive content within a tree generally decreases with height. The chemical composition and concentration of extractives varies markedly with species, and can serve as an aid in species identification.

3.2 TREE GROWTH AND THE PHYSICAL STRUCTURE OF WOOD

The elongated fibrous cells in wood are hollow. Most are arranged parallel to each other along the trunk and branches of a tree. But all cells in the tree are not the same because of the way a tree grows.

The outside of the tree is covered with *bark*. The wood of the tree trunk is divided into two zones—*sapwood* and *heartwood*—with different and distinct functions. The sapwood is closest to the bark, and contains active conducting and storage cells that are light in color. The heartwood is older, darker in color, and farther from the bark. The very center of the tree, and of each twig and branch, is the *pith*, the soft tissue about which the first wood was formed in the newly growing twig.

The sapwood has high moisture content, because it transports the water or sap. It has an important storage and conduction function for starch, sugar, and other biochemical essentials for tree growth. The cell walls of sapwood are thinner to facilitate the storage of tree nutrients. Its high starch and sugar content make it more susceptible to microbial attack, chemical staining, and biodegradation than heartwood, but it is easier to make into pulp. Sapwood typically ranges from 1-1/2 to 2 inches in thickness, though it may be one-half inch or less thick in species such as catalpa and black locust. It can be 6 inches or more in thickness in fast-growing species like maple and Southern pine, which is why these are so useful for papermaking.

As cells age and die, sapwood is gradually converted into heartwood. Heartwood consists of inactive cells that store chemicals known as extractives. It does not function for either conducting sap or nutrient storage. The extractives are formed in the area between the sapwood and heartwood through a complex biochemical transformation of starch and sugar that is deposited in heartwood dead cells under conditions of little to no oxygen. These extractives are responsible for heartwood's high density, dark color, distinct odor, lower hygroscopicity, and fiber saturation point. It is more difficult to penetrate with liquid, more difficult to pulp, and is more resistant to decay and termites than sapwood.

Growth rings are produced because, in temperate climates for most species of trees, there is enough difference between the wood produced early and late in the growing season to produce distinct rings. It is possible to determine the age of a tree by counting the number of rings in its trunk. The wood produced in the spring is called *earlywood*. Produced at a time of rapid growth, earlywood is characterized by cells with relatively large cavities and thin walls. It is typically lighter in weight, softer, and weaker than *latewood*, which is produced during the summer. Latewood cells, produced at a time of slower growth with decreased photoperiod and lower temperature, have smaller cavities, thicker walls, and a higher density than earlywood.

Bark typically constitutes between 5% and 30% of the volume of a log. As the tree grows, the existing bark is pushed outward, becoming stretched, cracked, and ridged, and eventually sloughs off. In contrast, the old wood cells are covered over by the new wood cells, as the diameter of the tree increases. As branches die and fall off, the portion of the branch that was projecting from the tree is encapsulated, and becomes a knot in the wood of the tree.

It is useful, in discussing the structure of wood and tree, to talk about three mutually perpendicular directions. The *longitudinal* direction, from the ground up, is the *grain* direction in the tree, the direction in which most of the cells are oriented. The *radial* direction is the direction from the center of the tree horizontally outward. The third direction, *tangential*, is perpendicular to the radial direction and approximately tangent to the growth rings in the tree (Figure 3.4).

3.2.1 Cellular Structure

Most wood cells are long and pointed at the ends. There are also cells of different sizes and shapes. The cell walls surround a hollow central area called the *lumen*, which contains sap and extractives. Small pits in the cell walls allow sap to flow laterally from one cell to the other. The cells are joined to-

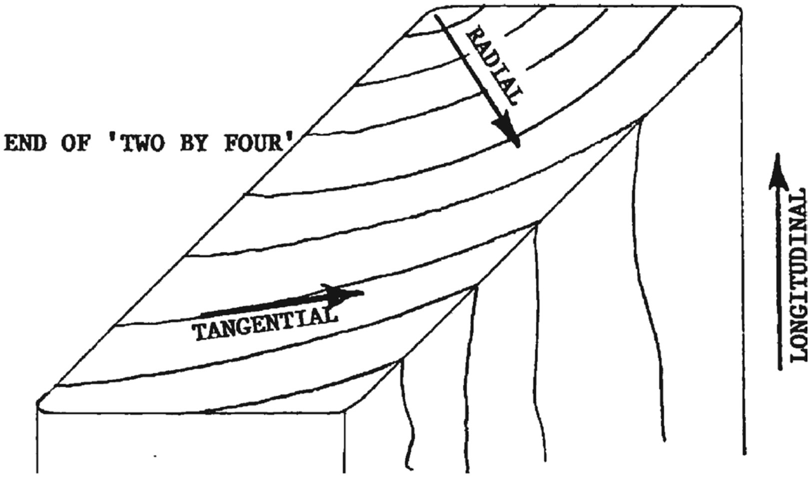

FIGURE 3.3. *Longitudinal, radial, and tangential directions in wood.*

gether through the *middle lamella* which is rich in lignin. The main objective of chemical pulping is the removal of lignin to obtain discrete fibers.

Within the tree, the cells are arranged and cemented together predominantly in straight radial parallel rows and straight spoke-like rays. Softwood and hardwood contain several different types of cells. The cellular structure of softwoods is much more uniform than that of hardwoods. Hardwood cells are more specialized.

The most common type of cells in softwoods are longitudinal fiber cells, called *tracheids*, which make up 90–95% of the volume, and are responsible for the strength and rigidity of the tree, as well as for longitudinal conduction of sap. A typical softwood fiber cell is 3–4 mm long and 25–45 μm in diameter, for an aspect ratio (ratio of length to diameter) of about 100:1. Tracheids have a hollow center (lumen) and are often rectangular in cross section. The general shape is described as blunt or rounded radially and pointed tangentially, much like a soda straw pinched shut at both ends (Bowyer *et al.* 2002).

The other major type of cell found in softwoods is *ray cells*. Rays serve to transport materials in the horizontal direction within the tree. Ray cells can be either tracheids that are positioned horizontally rather than vertically, or *parenchyma cells*. The main function of parenchyma cells is food storage and transport. Parenchyma cells are the longest living wood cells and remain functional throughout the sapwood; their death marks the transition of sapwood to heartwood. Softwood rays are narrow and typically comprise about 5–7% of softwood volume. While softwood can contain other types of cells, these are present in only minor amounts. Other softwood features include resin canals to distribute resin and epithelial cells where resins are stored.

Hardwoods have four major types of cells, each of which may comprise 15% or more of the wood volume. These are vessel elements, longitudinal tracheids, parenchyma cells, and ray cells.

Longitudinal sap conduction in hardwoods occurs in specialized cells called *vessel elements*. These cells are found in virtually all hardwoods, but only rarely in softwoods. They are short cells with very large diameters that are lined up and linked end-to-end along the grain to form long tube-like structures known as vessels. Viewed in cross-section, the vessels look like holes, and are often referred to as pores. In some hardwood species, the hollow lumen of the vessels, and thus the access for liquid transport, can be blocked by outgrowths from other cells (such as parenchyma cells) known as tyloses. The presence of tyloses in the vessels of white oak is the reason that oak is used to make barrels that are impervious to liquid.

The presence of these large vessels is a primary distinguishing characteristic between hardwoods and softwoods. In some species, the pores in the earlywood are much larger than those in the latewood; these species are classified as ring-porous, since the large early-wood vessels form a visible ring in a cross-section of the tree. In the majority of hardwood species, classified as diffuse-porous, the pores are more uniform in size and are distributed fairly evenly across the growth ring. In addition to adding a different type of cell, the large size of the vessels disrupts the orderly arrangement of the remaining cells, causing the pattern of cell arrangement in hardwoods to be much less uniform than in softwoods.

Hardwoods also have longitudinal fiber tracheids, but these cells are considerably shorter than softwood tracheids, and have thicker walls. Hardwood fibers average less than 1 mm in length, and tend to be rounded rather than rectangular in cross-section. Since hardwood fibers do not need to provide for sap flow, they are specialized for strength.

In many hardwood species, longitudinal parenchyma cells make up a significant portion of the wood volume, up to 24% in some domestic hardwoods and greater than 50% in a few tropical hardwoods, while some hardwood species do not contain any at all. They function primarily for food storage and transport.

As is the case for softwoods, hardwoods also contain ray cells. However, hardwood rays are often much larger than those in softwoods. Also, they are seldom arranged in the straight spoke-like patterns characteristic of softwoods.

3.2.2 Paper Fibers

Once wood has been subjected to pulping, all the recovered material is classified as *fiber*, regardless of the type of cell. The long fibrous wood cells are good for making paper because of their ability to interlock. The original di-

CHAPTER 4

Wooden Containers

Wood has long been used to make shipping containers. Barrels, boxes, crates, and pallets all rely on wood's strength, availability, and simple construction methods. Strong wooden containers are especially useful for military and other extreme operations. The custom-built dimensional versatility of wooden crates is an advantage for shipping machinery and other large, low volume, awkward-sized items. Wood is also used on a limited basis to make shipping containers for bottles of high-value wine and for gift premium presentation packages for products like bottles of liquor and cigars.

Wooden containers are a relatively small part—about 1%—of the packaging market today. The industry is the most fragmented of all packaging industries. There are four types of producers: large integrated timber companies, captive suppliers, independent producers, and co-ops. Most are small, with sales between $15 and $50 million annually.

Wooden boxes, crates, and pallets are designed to minimize the use of material while providing adequate protection from internal and external mechanical forces. This chapter describes the types of woods and fasteners that are used, standard box styles, and the construction of crates, barrels, and baskets.

4.1 COMMERCIAL BOX WOODS

The strength of a box, crate, or pallet depends on the type of wood, the design characteristics, and the strength of the fasteners and joints. Boxes can be made from softwoods or hardwoods. Hardwood is preferred for high stress applications, although thicker softwood can often give equivalent bending strength.

The type of wood also affects the strength of the joints: the harder the wood, the greater the nail-holding power. But harder wood has a greater tendency to split when nailed, which in turn, reduces joint strength. For this reason, hardwoods and softwoods have been further categorized by the U.S. Forest Products Laboratory and ASTM into four groups, based on their nail-holding power and tendency to split, as shown in Table 4.1.

Group I is mostly softwoods that have little tendency to split as a result of nailing; they have moderate holding power, moderate beam strength, and moderate shock resistance. They are soft, lightweight, low density, easy to work, hold their shape well, and are easy to dry.

Group II woods are denser softwoods with softer springwood rings between harder summer rings. They have greater nail-holding power and more tendency to split than Group I.

Group III woods are medium density hardwoods. They have about the same strength and nail-holding characteristics as Group II but are less inclined to split or shatter on impact. These are the most useful woods for box ends and cleats and furnish most of the veneer for wirebound boxes.

Group IV comprises the dense hardwoods. They have great shock resistance and nail-holding power, but are difficult to nail because of their hardness and have a tendency to split at the nails. This group is generally used in manufactured wooden containers made on high-speed equipment, since mechanization can somewhat overcome the nail driving problems. Group IV is often fastened with bolts or pre-drilled screws.

The grain of the wood usually runs horizontally in a box, lengthwise on the face. This makes for a stronger package than if the grain runs in the short vertical direction of the panels, because the walls when stressed are better able to flex instead of pulling out nails.

TABLE 4.1. Commercial Box Woods.

Group 1	Group 2	Group 3	Group 4
Aspen	Douglas fir	Ash (except white)	Beech
Basswood	Hemlock	California black oak	Birch
Buckeye	Western larch	California maple	Hackberry
Cedar	Southern yellow pine	Soft elm	Hickory
Chestnut	Tamarack	Soft maple	Hard maple
Cottonwood		Sweetgum	Oak
Cypress		Sycamore	Pecan
Fir (true firs)		Tupelo	Rock elm
Magnolia			White ash
Redwood			
Spruce			
Yellow poplar			
Willow			
Red alder			
Pine (except Southern yellow)			

ASTM D 6199-97

The wood must be of sufficient grade to do the job. Often the outer wood surface of a box has a smoother finish while the inside is rough. This provides a smooth surface for communication, marking, and handling. The width and thickness of softwood lumber are specified and sold in nominal dimensions (actual versus nominal dimensions were shown in Table 2.4). Most specifications limit the number and size of defects present on lumber. For presentation and gift boxes, all surfaces may be polished, stained, varnished, or finished to highlight the wood grain.

For container applications, it is important to use seasoned dry wood, in order to prevent shrinkage, warping, nail loosening and rust, and biodegradation. The moisture content may be specified. Per *ASTM D6199: Standard Practice for Quality of Wood Members of Containers and Pallets*, the moisture content at the time of fabrication should be no greater than 19% and no less than 9%. The U.S. Department of Defense requires that wood for crates should have moisture content between 12% and 19% of its dry basis weight (U.S. DOD 1999).

ASTM D6199 also gives a description of allowable defects in wood members, with the caveat that they must occur in positions where they do not interfere with fabricating the package. These include checks, warp, knots, and non-straight grain.

4.2 FASTENERS AND FASTENING

A wooden package will be stronger if it is designed so that the wooden members, rather than the nails, bear the load. The fastening devices and methods used to join lumber into shipping containers are an important contributor to package strength. The primary fasteners used are nails, staples, corrugated fasteners, screws, bolts, dowels, and strapping.

4.2.1 Nails and Nailing

Nails are classified by size and the shape of the head and body. The characteristics that affect joint quality are nail length, diameter, bending resistance, and withdrawal resistance. Most nails used in packaging are made from steel.

Nail size may be simply referred to by the type of nail and the shank length. But nail size is often still specified in the traditional *penny* system (designated by d).[9]

[9] The origin of this designation is obscure; there are at least two theories. The most cited is that in England, nails were made a certain number of pounds to the thousand for many years, and so 1,000 "ten-pound nails" weighed 10 pounds. By abbreviation and slang, the word "pound" came to be pronounced "pun," which came to stand for "penny," and the letter d came to stand for both "penny" and "pound" (Park 1912). On the other hand, the Oxford English Dictionary says that "penny" referred to a price per hundred at some point in time, and that 100 five-penny nails cost five pennies.

There are many shapes of nails; *ASTM F1667: Standard Specification for Driven Fasteners: Nails, Spikes, and Staples* specifies the materials, dimensions, and profiles of 62 styles. It also provides an ASTM identification code as an alternative to the penny designation. The shape of the nail body can be smooth, like *common nails*, or it can be coated or textured for added holding power.

The types of nails used most often for boxes, crates, and pallets are *common* and *box nails* with a plain (also called bright) or coated shank, or textured like *annularly threaded* (also called *ring shank*) or *helically threaded* nails.[10] Various types of nails are shown in Figure 4.1. Threaded nails can better resist dynamic forces in distribution and they do not loosen easily if the wood shrinks.

The fact that two types of nails have the same penny designation does not mean that they are the same dimensions. For the same penny size, most nails have the same length but diameter varies by type. Standard dimensions for common, box, and threaded nails are given in Table 4.2.

All styles used for packaging have a secure flat head as opposed to *finish* nails that have small heads that can easily pull through the wood. Nails that are applied by pneumatic tools may have heads that are shaped to better feed through the nailing gun, for example, flat on one side.

FIGURE 4.1. *Various types of nails (left to right); bright smooth wire nail, cement coated, zinc coated, annularly threaded, helically threaded, helically threaded, and barbed (Forest Products Laboratory 2010).*

---

[10] The names and styles of nails have changed over time. The nails that were used in the 1900s for boxes had more colorful names: *cooler*, *sinker*, and *corker* nails.

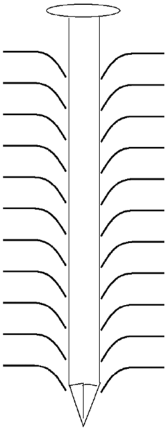

FIGURE 4.2. *Wood fibers (side grain) resisting the withdrawal of a nail.*

The most important measure of fastener effectiveness is *nail withdrawal resistance*. When a nail is withdrawn from wood, the wood fibers act like tiny wedges that resist the withdrawal of the nail (see Figure 4.2). As anyone who has pulled a nail will understand, the hardest part is the initial pulling. The maximum load occurs at relatively small values of initial displacement.

Withdrawal resistance depends in part on the density and dryness of the wood. Dense, dry wood is best for holding nails.

Withdrawal resistance also depends on the grain direction of the two wood pieces to be joined. Whenever possible, wooden pieces should be nailed together into their *side grain*, because nails into the *end grain* have poor withdrawal resistance and are more likely to work loose. The withdrawal resistance of nails clinched into the end grain (F_{eg}), direction perpendicular to the wood

TABLE 4.2. Length (L) and Diameter (D) in inches of Different Styles of Nails.

	Common Nails		Box Nails		Threaded Nails	
Penny (d)	L	D	L	D	L	D
6d	2	0.113	2	0.098	2	0.120
8d	2.5	0.131	2.5	0.113	2.5	0.120
10d	3	0.148	3	0.128	3	0.135
16d	3.5	0.162	3.5	0.135	3.5	0.148
20d	4	0.192	4	0.148	4	0.177
40	5	0.226	5	0.162	5	0.177

Forest Products Laboratory 2010 and ASTM F1667.

fibers is estimated to be about 75% of that of nails driven into the side grain (F_{sg}):

$$F_{eg} = 0.75 \times F_{sg}$$

Time loosens most nails. Nails driven into green wood and pulled out before it is dry, and nails driven into seasoned wood and pulled out soon thereafter, exhibit about the same withdrawal resistance. But if the moisture content of the wood changes between the time the nails are driven and the time they are removed, either through seasoning of the wood or due to cycles of wetting and drying, the nails may lose up to 75% of their initial withdrawal resistance. Relaxation of the wood fibers over time can also decrease nail withdrawal resistance, even without changes in moisture content. On the other hand, if the wood fibers deteriorate or the nail rusts under these conditions, the resistance may be regained or even increased.

It is 15–30% easier to withdraw nails from plywood than from solid wood at the same thickness, because fiber distortion is less uniform in plywood. However, plywood also has less tendency to split than solid wood, especially when nails are driven near an edge of the wood, and for thicknesses less than one-half inch, this tends to offset the lower withdrawal resistance. The direction of the plywood face grain has little effect on nail withdrawal resistance.

The most significant determinant of withdrawal resistance is the length and diameter of the nail. A rough estimate of the force required to remove a common nail from side grain is 300 pounds per inch of nail diameter per inch of penetration in the solid wood member:

$$F = 300 \text{ lb/in}^2 \times L \times d$$

Example 1:

One of the most common nails used for construction is a 16d spike (3-1/2 inches long, 0.162 inches diameter). Estimate the force required to pull out a fully-seated nail in the side grain.

$$F = 300 \text{ lb/in}^2 \times 3.5 \times 0.162 = 170 \text{ lb}$$

Example 2:

What weight can the box shown below (upside down) carry? Each nail is 2-1/2 inches long and 0.131 inches diameter. The bottom of the box is three-quarters inch-thick and the wood on the box sides is oriented so that the bottom is nailed into the side grain.

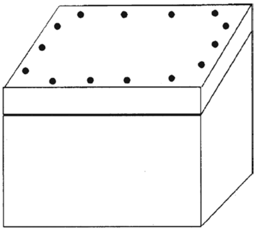

$$F = 14 \times 300 \text{ lb/in}^2 \times (2.5 - 0.75) \times 0.131 = 963 \text{ lb}$$

Of course, this is only a rough estimate. The actual holding power is a function of the wood's density, moisture content, grain direction, and age. The effect on withdrawal resistance of the wood density, the length, and diameter of the nail as expressed in the equation below:

$$F = k \times G^a \times L \times d$$

where,

F = the withdrawal resistance or the maximum load in lb or N (newtons)
G = the specific gravity of wood based on oven-dried weight and volume at 12% EMC
L = the penetration of nail in the member holding the nail point) in in. or m
D = the nail diameter in in. or m (Forest Products Laboratory 2010)

The constants k and a vary with the form of fasteners (spikes, screws, bolts, and staples) and wood members (plywood, particle board, oriented strand board, and solid wood). For more precise estimation, the reader is directed to the *Wood Handbook* (Forest Products Laboratory 2010) and the *Wood Crate Design Manual* (Anderson and Heebink 1964).

Withdrawal resistance is also affected by the shape of the nail. Common nails have a diamond-shaped point. A nail with a long, smooth round, sharp point would have greater withdrawal resistance, but is more likely to split the wood. A blunt point would reduce splitting, but has less withdrawal resistance since driving it breaks the wood fibers.

Withdrawal resistance can be increased by using nails with surface treatments for softer and greener woods. Surface treatments include cement or resin coatings and threading.

Cement coatings, despite their name, contain no cement. They contain resin that is applied to the nail to increase its withdrawal resistance by increasing the friction between the nail and the wood. In hardwoods, most of the coating is removed in the process of driving in the nail, so they provide no significant advantage. Cement coated nails are used for boxes, crates, and other containers made out of softer woods and intended for relatively short service, since it can add about 40% greater initial withdrawal resistance. The short service life is significant because the increase in withdrawal resistance drops off as the wood continues to dry.

If still greater holding power is required, nails that are *threaded* or *barbed* can be used. ASTM F1667 specifies several styles, most notably *pallet nails* that have a *helically threaded* shank. Threaded nails have the greatest resistance, especially over time and as wood dries, because they have a larger surface area. Furthermore the fibers stiffen between the threads, and so the nail is held by a greater force than simply friction. Compared to the same size bright nails, a threaded nail has 40% greater initial withdrawal resistance, and the difference can increase to about four times greater resistance over time. *Ring shank* (*annularly threaded*) nails also have good withdrawal resistance and are widely used for cleated panel crates.

The withdrawal resistance of nails and staples can also be increased by *clinching*, bending over the protruding points of the nails. Clinched nails have 45–170% more withdrawal resistance than unclinched nails. The relative increase in withdrawal resistance varies with species, moisture content of the wood and its variation, the size of the nail, and the direction of clinch with respect to the grain of the wood.

Bending resistance is another useful measure of a nail's effectiveness. A stiffer nail makes a more durable joint. Nail-bending resistance is measured by the angle in degrees that a nail bends when hit from the side with a test weight. The measure is called the *MIBANT angle*. For example, nails with MIBANT angles of 8°–24° are considered to be suitable for pallet manufacturing.

The number of nails and their spacing affects the strength of a joint. Nails should be no closer than one inch to each other or to the edge of the board, whenever possible, to avoid splitting the wood. Every board should have at least two nails at each end, in order to give sufficient rigidity to the structure.

Nail heads should be driven flush. Over-driving weakens the wood grain, and under-driving reduces the holding power. Furthermore, protruding nail heads are a potential injury and damage hazard.

4.2.2 Other Fasteners

Screws and bolts are used especially when the package is meant to be easy to open or re-closable, and for boxes made from dense Group 4 woods. Bolts are also used for mounting objects to bases in crates.

Common wood screws are available in many different diameters, lengths and shapes. Most wood screws are available with either slotted or *Phillips heads* (with a recessed cross). The Phillips heads offer a production advantage over slotted heads, because the screw driver is less likely to slip and more likely to stay centered.

Holes for bolts and screws are pre-drilled, especially when using dry dense hardwoods, to make the screw easier to drive and to prevent the wood from splitting. The hole should be shorter and narrower than the screw. The holes for softwood should be narrower than those for hard woods.

Staples, like some nails, can be driven mechanically. They should be driven with their crowns across the grain of the lumber or face-grain of the plywood. When two pieces are joined with their grain forming a right angle, the staples should be driven so that the crowns bridge the two at a 45° angle.

Corrugated fasteners and glue are used to connect *built-up faceboards* (a panel made from joined pieces). Corrugated fasteners also provide a security advantage at box closure points. Since a corrugated fastener has no head, it cannot be removed without great effort and leaves signs of prying.

4.2.3 Strapping

Metal strapping is often used to reinforce boxes and crates. The use of strapping on crates and boxes relieves stress on the nails, and also acts to minimize bulging. Strapping placed around the box, at some distance from the ends, can dissipate shocks. So can strapping that runs lengthwise on the box, perpendicular to the grain of the ends.

For very heavy crates, shorter strapping that extends around a corner is used for reinforcement. The legs of a *corner strap* are generally eight inches long, and the ends are nailed into the wood. Longer *tension strapping* is used to secure the top to the sides of a crate, with anchor plates on each side that permit tightening the strap as it is applied.

Strapping can be made from steel or plastic, but metal is most often used for crates. It can be wire-like or flat. *ASTM D4675, Standard Guide for Selection and Use of Flat Strapping Materials*, compares strap types based on their properties, ability to withstand outdoors, tension, and unit load type. It also provides advice on the number and placement of straps for different wood and corrugated box configurations.

Strapping should always be perpendicular to the grain of the wood, and should be applied tightly, sinking into the wood at the edges. For best performance, strapping should be applied just prior to shipment, since any wood shrinkage will result in loose strapping.

4.3 WOODEN BOXES

Three kinds of wooden boxes are described in the next sections: standard nailed box styles, wirebound boxes and pallet bins. These differ from the crates discussed later (in Section 4.4), which depend on their frame for strength, and may not even have walls. It should be noted, however, that in common jargon, the word "crate" is often used to refer to any wooden package.

Strictly speaking, wooden boxes rely on the walls as their primary source of strength, although cleats and diagonal members can be added to prevent distortion.

When the contents of boxes are not mounted to the base, dunnage material like plastic foam, corrugated blocks, wood, or other material is used to block and brace the product(s) inside. If a water vapor barrier is required, the box can be lined, or the product encapsulated in polyethylene film that may be impregnated with a vapor corrosion inhibitor to further prevent moisture damage.

Paper or foam impregnated with a vapor corrosion inhibitor (VCI) is also often used to protect metal products from corrosion. VCI materials do not provide a moisture barrier, but the chemicals they contain act to prevent or reduce corrosion.

4.3.1 Standard Nailed Wooden Box Styles

Wooden boxes can be built in a sawmill or carpentry shop. Nailed wood boxes and cleated panel crates account for 39% of all wooden containers, and about half of that is shipped as shook, thin boards or engineered wood products that are sawn to size at mills and later assembled in the customer's *box room* (Impact Marketing Consultants 2006).

There are nine standard styles of nailed wooden boxes, the first six developed in the early 1900s by the National Association of Wooden Box Manufacturers and the U.S. Department of Agriculture's Forest Products Laboratory. The principal difference in their construction is the design of the ends, as shown in Figure 4.3. (The following discussion is adapted from Plaskett 1930.)

Styles 1 (uncleated end) and *6 (locked-corner and dovetail)* are simple constructions that are less strong than the styles with reinforced ends. They have a tendency to split along the grain when dropped, and are stronger when the ends are made from a single piece of wood. The nails in style 1 have low holding power because they are driven into the end grain of the box.

Weight limits have been developed for each style, but strapping or other reinforcement can be added to increase the weight bearing ability. Style 1 is used to ship bottles of premium French Bordeaux wines, and depending on the materials can hold loads weighing up to 60 pounds. The locked corner and dovetail in style 6 are secured by glue between the series of tenons, which is more rigid than nailing, but can fail by breaking or pulling apart. Style 6 can carry loads up to 100 pounds. Variations of style 6 are favored for presentation boxes used to encase an expensive bottle of liquor, often with a coffin-type lid.

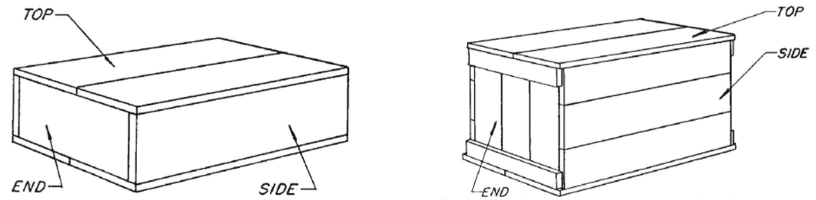

Style 1 Box (uncleated ends)

Style 4 ½ Box (two exterior end cleats)

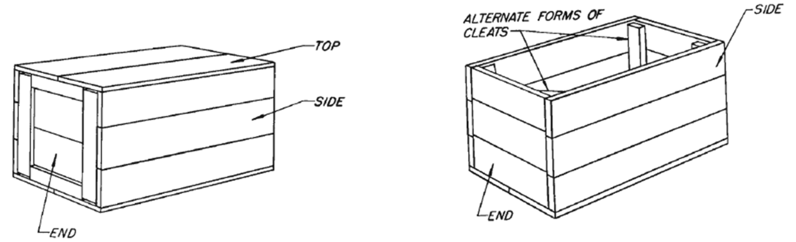

Style 2 Box (full cleated ends, butt joints)

Style 5 Box (two interior end cleats)

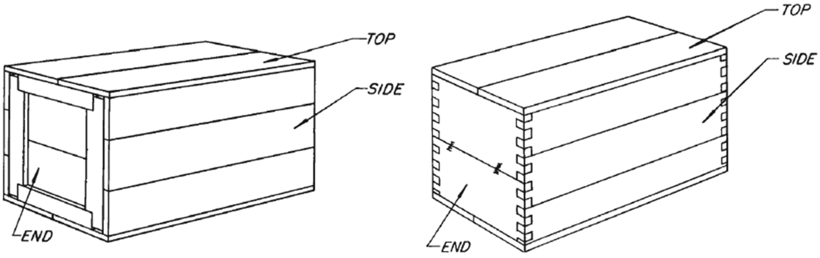

Style 2 ½ Box (full cleated ends; notched cleats)

Style 6 Box (lock-corner)

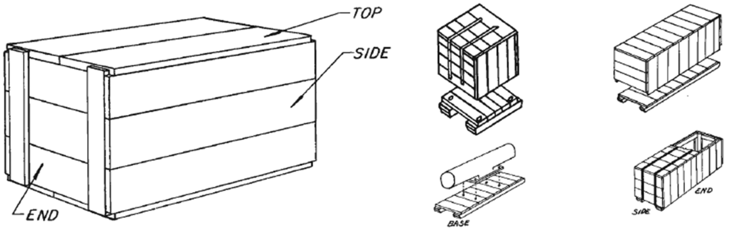

Style 4 Box (two exterior end cleats)

Style 7 Box (skidded base & separate reinforced wood)

Source: US. Federal Specification PPP-B-621D

FIGURE 4.3. *Standard nailed wooden box styles.*

The other styles have *cleats*, reinforcing members that strengthen the joints and secure the ends. Some of the nails are driven through the sides into the cleats and some are driven into them from the ends. The use of cleats avoids end-grain nailing. This increases the nail-holding power and adds rigidity to the box. It also reduces the possibility of the nails splitting the wood.

Styles 4, 4-1/2, and 5 have ends that are reinforced by two cleats, either vertical or horizontal on the outside or vertical (rectangular or triangular) on the inside of the box. The use of cleats across the grain of each end increases the strength of the container and reduces the need for end-grain nailing. Styles 4 and 4-1/2 can be made to carry up to 600 pounds. Putting the cleats inside the box, if the shape of the contents allows space, reduces the length of the sides. But it also reduces the carrying capacity to less than 200 pounds.

Styles 2 and 2-1/2 are further strengthened with four cleats per end. The two horizontal cleats increase the rigidity of the top and bottom, and the two vertical cleats increase the rigidity of the box sides. These styles can be made to carry up to 600 pounds. The two styles differ in how the cleats are joined. The cleated end with butt joints, Style 2, is most commonly used since less labor and lumber are required to manufacture it.

Style 7 has a base with *skids*, used to facilitate material handling by forklift. The contents are attached to the base that has, at minimum, three inch by four inch boards (called skids) along each of two bottom edges. A separate hood is assembled from top, side, and end panels that have been reinforced with framing members and diagonals.

Box styles other than Style 7 can also have skids attached to the bottom. The general rule for skids is that skids should be no less than 2-1/2 inches nor more than one-sixth of the length of the box from the end. When four-way entry is required, the skids are thicker and notched to permit entry from the side or lower rubbing strips are added.

Reinforcements include battens, diagonals, and additional cleats. Battens are reinforcing strips mid-wall that are either inside the box or encircle it and are held in place with the help of strapping. Outer battens can also function as skids.

Additional cleats can be added to the ends. Diagonal reinforcing members, made from the same material as the cleats, are sometimes used on the ends or sides and can be arranged in a zigzag pattern, with a peak at the center of a long panel where it meets a center batten, as shown in Figure 4.4.

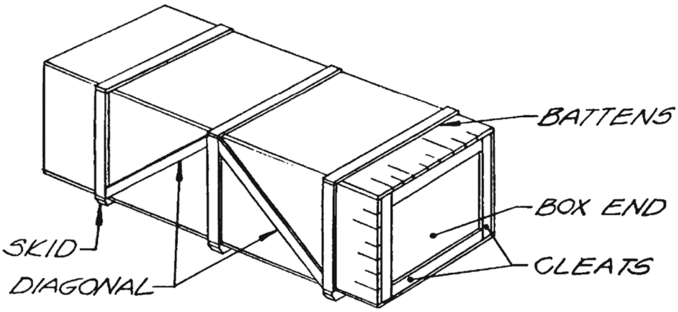

FIGURE 4.4. *Example of reinforced Style 2 box.*

The box standards specify the thickness of the wood in each of the four wood groups to be used for various weight products shipped either domestically or overseas. They specify how to set up boxes of each style and how to choose wood thickness, nail and screw sizes, and fastener spacing patterns.

In general the standards reveal:

- The thicker or softer the wood, the bigger the nails need to be.
- The smaller the nail, the closer should be the spacing of the nails.
- Nails driven into end grain should be more closely spaced than those in side grain.
- It recommends using 25% fewer coated nails, compared with bright ones.

The standards can be found in *ASTM D6880/D6880M Standard Specification for Wood Boxes*.

All U.S. government wooden container standards like this have in the past been managed by the U.S. Government's General Services Administration (GSA). Some have been prepared by the Department of Defense (DOD) through a mutual agreement. As a result of Circular Number A-119, titled "Federal Participation in the Development and Use of Voluntary Consensus Standards and in Conformity Assessment Activities," GSA and DOD adopted ASTM standards in place of the government's wooden container standards.

In the new ASTM standards, many parts were left out or rewritten to allow more liberal fabrication procedures and reflect commercial practices. Mandatory standard statements were changed to allow more liberal fabrication procedures. The requirements that are unique to the military are added in a supplementary section and do not form a part of the voluntary standard unless cited in government contracts.

But military specifications are unique to the military's logistics operation and site requirements such as the degree of protection, military marking, and shelf life. Military standards are based on extreme logistics situations. Most are designed for a 10-year life expectancy for purposes of military preparedness, in circumstances ranging from desert to swamps, from blazing hot to freezing cold. Testing, described in Mil-Std-2073, is much more stringent than for commercial packages (U.S. DOD 2011).

For products shipped in modern civilian logistics systems, the military standards may be excessive, but the standard styles represent a set of successful principles to guide commercial wooden package design. Most commercial wooden boxes are still based on the standard styles.

4.3.2 Wirebound Boxes

Wirebound boxes are manufactured from thin veneer reinforced by steel

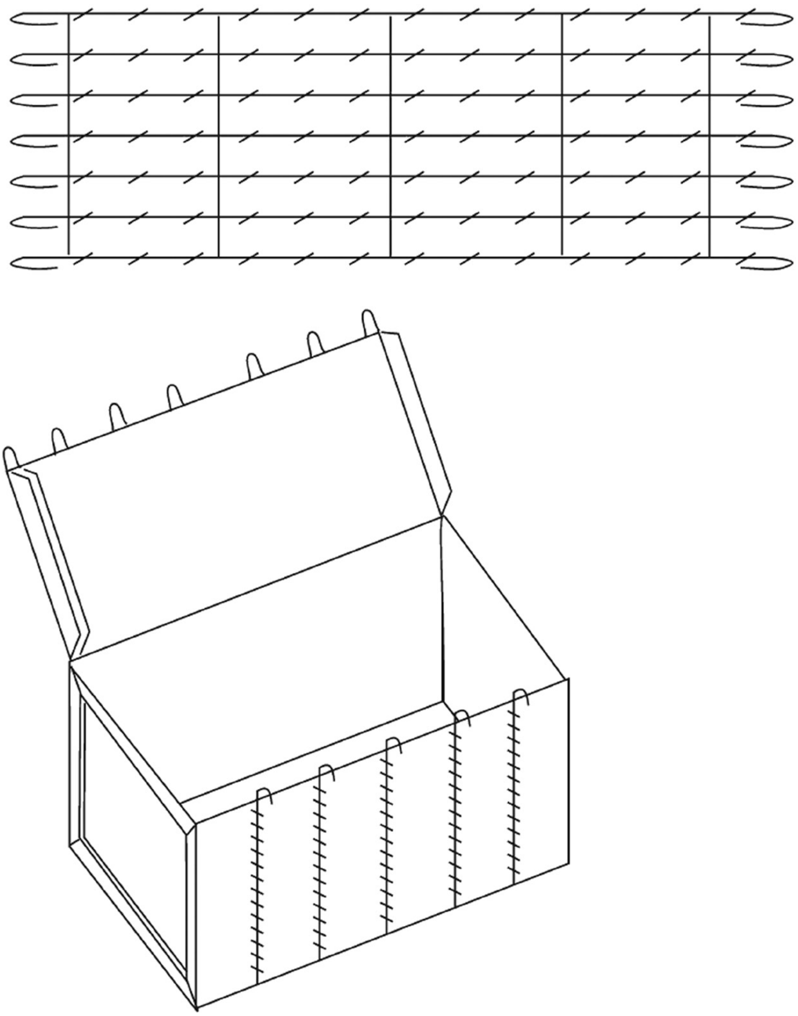

FIGURE 4.5. *Wirebound box, wire configuration on knocked-down form and assembled box.*

binding wires that are fastened to the wood by staples, and by wooden cleats on the ends of the box, as shown in Figure 4.5. There are a number of different styles. Most are closed by putting wire loops on the cover through mating loops on the body and bending them over.

Wirebound boxes became popular in the early 1900s as a substitute for nailed wooden boxes. They offered many advantages. They are inexpensive and can be produced at high speeds. They have very high strength-to-weight ratios, can

Next, chips of an acceptable size are sorted out, using screens, from those that are too large or too small. The first screen retains the oversized material for further processing, and successive screens remove undersized chips and sawdust destined to be used as fuel. Non-wood contaminants that are not removed by screening are removed by magnets, chip washers, and pneumatic cleaners.

Rather than chipping after harvesting and debarking, it is also possible to use whole-tree chipping, usually done in the forest as the wood is harvested. In this process, the whole tree, including bark, branches, twigs, and leaves, is converted into chips. The primary advantage is increased yield of fiber. The disadvantage is increased contamination, which requires a greater degree of attention to cleaning and screening. Usually, it is impossible to remove all the bark, so pulping processes and end uses that can tolerate the presence of some bark must be selected.

The chips are conveyed into a storage area where they await pulping.

6.2 PULPING

The pulping process frees the cellulosic wood fibers from the chips by breaking down the wood's inter-cellular lignin glue, using a mechanical, chemical, or hybrid process. Once the fibers are separated from each other, they are suspended in water, bleached (if desired) and refined. This slurry may be used directly in the paper manufacturing process, or the pulp may be dried and then resuspended in water for paper-making at a later time or at a different location. An overview of the pulping process is shown in Figure 6.1.

The process has to be well controlled to ensure that the fibers are adequately refined but not simply pulverized into dust. The yield and properties of the pulp depend on how much lignin is removed. Cellulose (which is about 45% of the wood) is the most desirable for paper; it gives fibers their strength and is light in color.

Any kind of wood and many kinds of vegetation can be pulped. The properties of the fibers vary by species. Prior to the invention of the mechanical method for pulping wood in the 1850s, almost all paper was made from linen rags or straw and was pulped in a large mortar and pestle. Some alternative sources of fibers are discussed on page 197.

Most packaging paper today is made from softwoods because they have long, strong fibers. This is the opposite of the relative strengths of the wood itself. Hardwood has short fibers, but the lignin and structure of the tree give it more strength than softwood (on average).

On the other hand, the strength of paper relies on the network of interlocking fibers. Long, flexible, and slender softwood fibers interlock better than do short and stiff hardwood ones. Softwood has fibers that, on average, are more than three-fold as long as those of hardwoods (1 cm versus 3 cm on average).

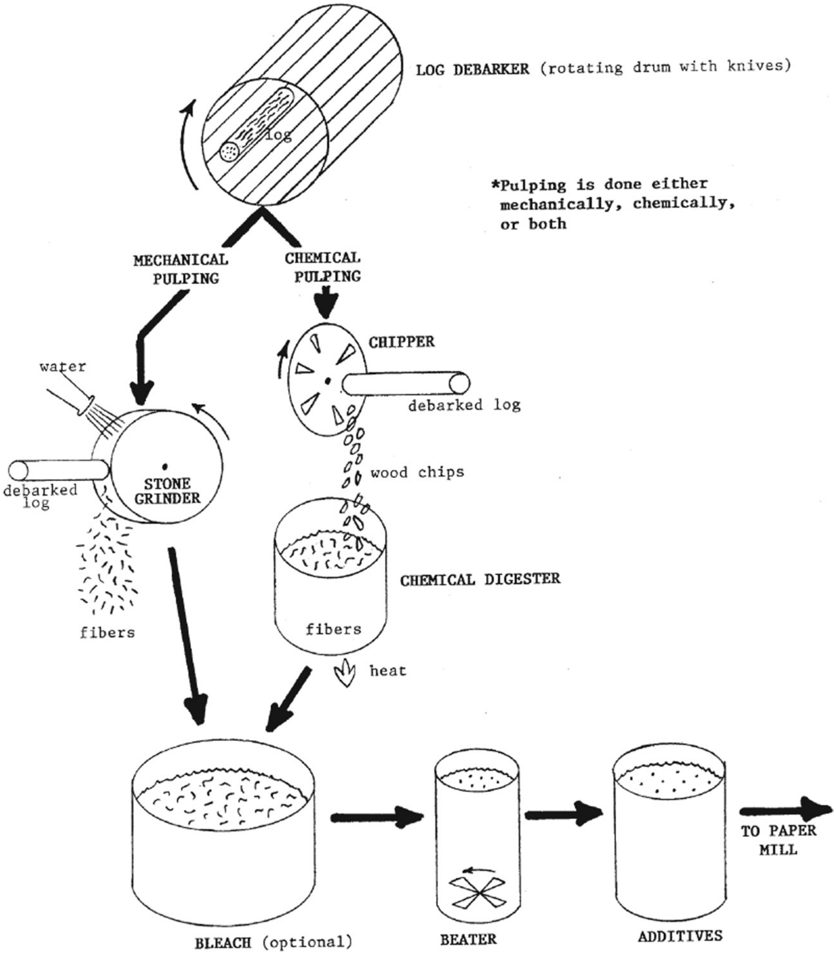

FIGURE 6.1. *Pulping is done either mechanically, chemically, or both.*

The longer the fibers, the stronger the paper. Long fibers contribute to tensile and puncture strength, tearing resistance, folding endurance, and stiffness.

But long softwood fibers have a drawback: they can give the paper a rough or coarse surface with the density varying across the sheet, which is unsuitable for high quality printing. Therefore, softwood pulp is only used alone when strength is needed and graphic demands are low, for example in kraft paper bags and liners for corrugated fiberboard.

Hardwood has shorter fibers and produces weaker paper. But because the shorter hardwood fibers better fill in the sheet, they make a smoother paper

FIGURE 6.2. *Long silky softwood pulp fibers. Reprinted with permission of TAPPI, from Parham and Gray,* Practical Identification of Wood Pulp Fibers *(1982), iii.*

FIGURE 6.3. *Shorter stiffer hardwood pulp fibers. Reprinted with permission of TAPPI, from Parham and Gray,* Practical Identification of Wood Pulp Fibers *(1982), iii.*

that is more opaque, and is therefore better for printing. Most printing paper is made from a blend of both hardwood and softwood fibers.

The fluted middle layer of corrugated board is generally made from hardwood because the short fibers help improve the thickness and the stiffness properties. Corrugated medium is used for its structure, not its tensile strength.

Fiber made from logs and wood chips is called *virgin* fiber. Virgin fibers are longer, stronger, and more expensive than recycled fiber.

An increasing amount of recycled fiber is being used in packaging. This *secondary fiber* is recycled from wastepaper. It is less expensive than virgin fiber and it is believed to be an environmentally favorable alternative. Secondary fiber is distinguished from *broke*, which is trim or off specification paper that is reused within the same mill. But repulping produces a weaker paper than paper made with virgin fibers (from the same species of tree). For this reason, many papers are made from a mixture of virgin and secondary fibers.

There are three categories of pulping processes. Mechanical processes simply tear apart the fibers from logs and wood chips. Chemical processes rely on chemical treatment to dissolve the lignin glue and separate the cellulose fibers, resulting in pulp with longer fibers and therefore stronger paper. Hybrid processes are a combination of mechanical, physical, and chemical means to remove the lignin and separate the fibers.

Chemical pulping, because it can produce relatively undamaged fibers, makes stronger paper, but the yield is lower than 75% because of the removal of the lignin (20–25%) and part of the hemicellulose and extractives. Mechanical pulping produces higher yields because it retains most of the lignin and hemicellulose; the yield can be as high as 95%. Table 6.1 compares these three processes, which are discussed later in this chapter.

6.2.1 Mechanical Pulping

Mechanical pulping literally grinds and shreds the wood into pulp. It was the first method invented for breaking down wood into fibers for papermaking. Mechanical pulp was first produced commercially in Europe in 1852 and in the United States in 1867.

Because the process is mechanical, the lignin is not removed, and so the fibers are shorter than those produced in chemical processes. The paper is less strong and more prone to yellowing than that produced from chemical pulp. Newsprint (and the recycled paperboard made from it) is made from mechanical pulp.

Yields are high, typically 90–95%, which is why mechanical pulping produces the lowest cost virgin fiber. But mechanical pulping is energy-intensive, so mechanical pulp mills are often found near relatively inexpensive sources of electrical power, such as hydroelectric power facilities.

TABLE 6.1. Comparisons of Mechanical, Semi-chemical, and Chemical Pulping.

	Mechanical	Hybrid	Chemical
Methods	Stone groundwood Refiner mechanical Thermomechanical	Neutral sulfite semi-chemical (NSSC) TMP, CTMP, High yield kraft	Kraft Sulfite Soda
Pulping	Mechanical energy, heat, steam (little or no chemicals)	Chemical, biological pretreatment, then mechanical	Chemicals and heat (little or no mechanical)
Yield	High (85–95%)	Intermediate (55–90%)	Low (40–75%)
Type of Fiber	Short • Weak • Unstable Stiff, thick	Intermediate (some unique properties)	Longer • Strong • Stable Flexible, slender
Printing	Good print quality Opaque and smooth	Intermediate	Poorer print quality Rough
Bleaching	Difficult to bleach	Intermediate	Easier to bleach
Examples of Packaging Uses	Newspapers (ONP) recycled into paperboard	Corrugating medium (NSSC) Linerboard (high yield kraft)	Bag paper, SBS and SUS board (kraft) Greaseproof, glassine (sulfite)

6.2.1.1 Stone Groundwood Pulp

The oldest mechanical pulping method is the *stone groundwood* process. The abrasive surface of a revolving grindstone generates heat and shear in the presence of water. It also cuts and shortens fibers. The frictional heat generated (120–130°C) raises the temperature of the wood surface, softening the lignin. The fibers are washed away from the grinding stone's surface with water, the slurry is screened to remove slivers and large particles, and the water is removed leaving the *pulp stock*.

Pulp from the stone groundwood process is commonly designated *SGW*. The SGW process can use either hardwood or softwood as the fiber source, but softwood is used most often.

The efficiency of the simple groundwood process depends on careful control of the stone surface roughness, pressure against the stone, water temperature, and flow rate. For example, when the stone has been freshly roughened, production rates are high and energy consumption low, but because the sharp grits cut the fibers, the pulp quality is poor. As wear accumulates, cutting of the fibers decreases causing an improvement in the quality of the pulp, but also decreasing production and increasing the energy needed. A pulp mill commonly adjusts sharpening cycles for individual grindstones so that the overall pulp quality is consistent.

A variation on this process is *pressure groundwood* (*PGW*), which is carried out at a higher temperature and higher than ambient pressure. Since the temperature at the grinding zone is higher, less power is required. It results in paper with improved tear strength compared to SGW, though not as good as refiner mechanical pulp.

6.2.1.2 Refiner Mechanical Pulp

Refiner mechanical pulp (*RMP*) was developed in the 1970s to use wood residues from sawmills and sources that convert wood into chips. Most mechanical pulping mills have switched to this process because it reduces the cost of materials and labor and retains longer fibers. This produces paper that is somewhat stronger than that from SWP, but lower in opacity and brightness.

In the RMP process, wood chips, in a slurry with about 70% water, are fed into a refiner where they are reduced to fiber fragments in a series of attrition mills, between rotating disks. The internal friction in the refiner heats the wood, softening the lignin and permitting efficient reduction of the chips to individual fibers. Since the mechanical treatment results in stiffening of the lignin, refiner pulps are sent to latency tanks where they are held at about 90ºC and are slightly agitated to relieve internal stresses and allow the fibers to uncurl. The RMP process has undergone extensive development, and most new factories use thermal or chemical pre-softening of the chips.

6.2.1.3 Thermomechanical and Chemi-Thermomechanical Pulp

Thermomechanical pulp (*TMP*) is significantly stronger and contains less screen reject material than simple mechanical processes. TMP preheats the chips with steam followed by refining at higher temperatures and pressures than are used for standard mechanical pulping. Typically, the chips are presteamed at 120–140°C for about four minutes, and then ground through a pressurized disc refiner in a slurry of water. In some cases, the high pressure steam generated during refining is used for drying in the paper machine, reducing the overall energy use.

The higher temperatures and pressures cause more lignin softening, and therefore fibers are less damaged and can make paper with higher strength. Figure 6.4 compares strength properties of pulp made by the SGW, refiner groundwood, and thermomechanical processes, and shows how strength has increased with each innovation, making it less necessary to mix in some long-fibered chemical pulp. For example, SGW was traditionally mixed with 15–

25% chemical pulp to make newsprint, its largest market. Now some newsprint is made from 100% TMP.

Chemi-thermomechanical pulping (*CTMP*) uses pretreatment with sodium sulfite at 130–150°C for up to 1 hour, followed by pressurized refining. Yields are high, 85–90%, but lower than pure mechanical processes since some lignin is removed. The pulps have good strength and can be bleached, but produce paper with less opacity than SGW. They are also absorbent, and so CTMP is used to produce pulp for tissue.

These mechanical processes produce an inexpensive high-yield printing paper. The pulp is not as bright as bleached chemical pulp, but is more opaque (due to the contribution from lignin, fines, and broken fibers). It also is more affected by light and aging, becoming yellow and brittle on exposure to UV light that chemically degrades the lignin. It is not possible to permanently bleach the pulp.

Mechanical pulp is weaker than chemical pulp. The fibers are shorter and, because they are not chemically altered, are stiff and resist consolidation in the paper sheet. Therefore, the bonding between the fibers is relatively poor, and the sheet has relatively low density, tending to be bulky and porous. Mechanical pulping produces a large quantity of *fines* (non-fibrous particles) some of which are lost along with water-soluble components of the wood. The presence of fines in the pulp aids bonding between fibers in the papermaking process and adds opacity.

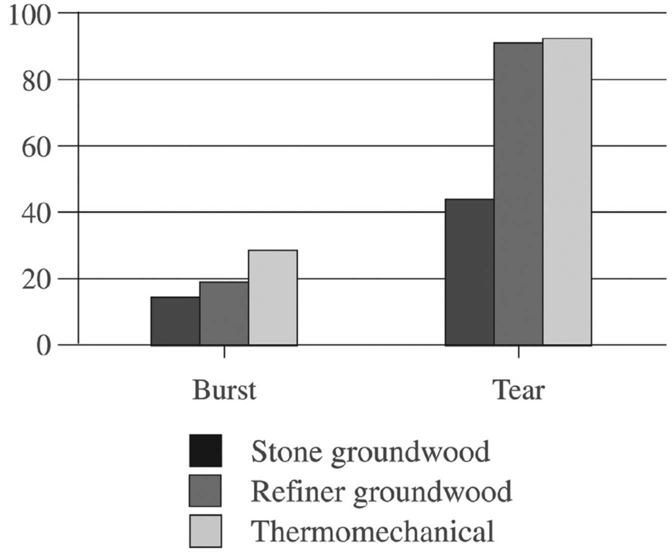

FIGURE 6.4. *Relative strength of spruce mechanical pulps (MeadPaper 1983).*

Mechanical pulp forms a highly opaque paper with good printability. It is used to make newspapers, catalogs, and magazines. Its greatest use in packaging is secondary, in grades of paperboard such as chipboard, which contain recycled newsprint. It is also added to chemically pulped fibers to reduce the cost of some packaging papers.

The characteristics of newsprint and other papers made from mechanical pulp make them ideal for use as recycled stock for paperboard. It is inexpensive and high-yield. It has weak fiber-to-fiber bonds that are easy to disrupt during recycling. And its low density makes a high quality, light weight, thick (and therefore stiff) board.

6.2.2 Chemical Pulping

With the primary exception of paperboard made from recycled mechanical newsprint, most paper for packaging is made from chemically processed pulp. Seventy percent of all pulping is chemical, and most of that is the kraft process. Chemical pulp produces higher quality, stronger paper that if bleached, is also whiter.

Chemical pulping cooks the wood chips in a chemical solution that is either acid or alkali. The chemicals, high temperature (140–190ºC) and high pressure (0.6–1 MPa) dissolve much of the lignin, thus freeing the fibers rather than mechanically tearing the wood apart.

Yields are much lower than for mechanical pulping, typically 40–55% lower, since most of the lignin and a great deal of the hemicellulose are lost in the process. But strength is higher due to the largely intact long cellulosic fibers. Table 6.2 compares the retention of cellulose and other wood components in mechanical and chemical pulps.

Since most of the lignin is removed, chemical pulp is easy to bleach in order to make a higher quality printing substrate. The lignin removal is not total, and the chemical reactions of the residual lignin with the pulping chemicals turn it the dark brown color characteristic of kraft paper. The bleaching process removes most of this residual lignin, leaving the pure white color of the cellulose. The absence of lignin is also the reason why bleached chemical pulp is less prone to ultraviolet light-induced discoloration, compared to mechanical pulp.

TABLE 6.2. Approximate Yields and Percent Retention of Wood Components During Pulping (Peel 1991).

	Cellulose	Hemicellulose	Lignin	Solubles	Overall Yield
Mechanical	100	100	100	25	90–95
Chemical, unbleached	90–95	32	9–25	5	40–55

Chemical processing, in the past, has been responsible for significant pollution problems. A great deal of water is used in the process, and the wastewater contains pulping chemicals, sometimes bleach, and also organic materials that are high in biological oxygen demand (BOD). Since sulfur-based chemicals are used, resultant emissions of organic sulfide gases tend to have strong noxious odors which can be offensive even at concentrations as low as one part per billion. Due to environmental legislation, the paper industry now recycles and cleans the water and has emission controls for the air. The pulping chemicals are generally recovered by burning the residual cooking liquor to recover metal salts, and then chemical treatment is used to regenerate the pulping chemicals. Many mills are switching from chlorine to alternative bleaching systems, reducing the toxicity of the effluent. While these changes have not eliminated all environmental problems, emissions have been greatly reduced in both amount and environmental impact.

The soda process was the first chemical pulping method, invented in 1851. It used a strongly alkaline solution of sodium hydroxide to dissolve the lignin in straw. There are still a few *soda mills* operating, using this process to produce pulp from hardwoods and non-wood plant materials. But most were converted to kraft mills once the kraft process was developed.

The following three sections describe the three primary kinds of chemical pulping used today, in the order that they were commercialized: sulfite, kraft, and semi-chemical processes. The most-used chemical pulping method for packaging paper is the kraft process because of its better chemical recovery and higher strength paper.

6.2.2.1 Sulfite Process

The sulfite process, first commercialized in Sweden in 1875, was the most common chemical pulping method around the world for many years. In the 1930s the kraft process became more dominant because it can utilize woods that are not suitable for sulfite processing. Since then, the number of sulfite mills has decreased and no new ones have been built in North America since the 1960s. Less than 3% of pulping now uses this process.

The sulfite pulping process is based on the use of sulfurous acid (H_2SO_3) and bisulfite (HSO_3-ion) to attack and solubilize the lignin. Hydrolysis is followed by sulfonation of the lignin, fragmenting and eventually dissolving it, freeing the cellulosic fibers. Some species of trees are not suitable for sulfite pulping.

It is an acidic process, so it operates at a low pH compared to the kraft and soda processes that are alkaline. A wide range of pH can be used depending on the relative proportions of sulfur dioxide, bisulfite ions, and sulfite ions.

The *acid sulfite* process is carried out at a pH of 1.5–2. Typical conditions are temperature of about 110ºC for up to 3 hours, followed by a final 2-hour treatment at 140°C. Originally, calcium sulfite was used along with sulfur dioxide, but calcium cannot be recovered economically. Therefore, more modern processes typically use ammonium hydroxide, magnesium hydroxide, or sodium carbonate to absorb the sulfur dioxide, rather than using limestone. This results in ammonium, magnesium, or sodium sulfite in the pulping liquor, rather than calcium sulfite. A typical concentration is 5–6% sulfur dioxide and 1–1.5% Na_2SO_3. The acid sulfite process is suitable for non-resinous softwoods and some hardwoods.

Acid bisulfite pulping is carried out at a pH of 1.5–4, depending on the ratio of salt to free SO_2. True *bisulfite pulping* is carried out at a pH of 4–5, and a temperature of 170–175°C for 2-1/2–3-1/2 hours. It is suitable for hardwoods and softwoods with low extractive content.

Recent research in sulfite pulping has concentrated on alkaline processes. One promising new development is the *alkaline sulfite-anthraquinone* pulping (*ASAM*) process that can also be used on more kinds of woods. The yield is about 2–3% higher than for kraft pulp, and tear strength of the resultant paper is about 20% less. It results in improved lignin removal and easier bleaching.

Sulfite pulps tend to have lower strength than kraft pulps, but are easier to refine. They are light in color, easier to bleach, and produce a higher yield of bleached pulp. A few mills still exist because of the advantage offered by the sulfite process of easier delignification, which produces pulp with more hemicellulose. On the other hand, long cook times result in nearly complete removal of both hemicellulose and lignin. Some cellulose is also lost at long cook times.

Sulfite pulp makes a less porous sheet than kraft pulp. It is still used somewhat for making fine writing paper and specialty packaging papers like greaseproof, glassine, and waxed paper. However, the proportion of wood pulp made using the sulfite process has declined substantially over the last few decades.

6.2.2.2 Kraft Process

Kraft pulping is also known as the *sulfate process*. The word *kraft* comes from the German word for “strong.” It produces the highest strength pulp of any process, and can process a wide variety of species, hardwoods and softwoods, although in the United States young southern pine predominates.

Kraft pulp has the longest fibers, which form a strong network. The fiber surfaces have higher free energy and more carbohydrates, compared to other types of pulp. Kraft pulping increases the size and volume of submicroscopic pores in the cell walls where the lignin has been removed. It increases the flexibility and conformability of fibers so that they more readily flatten into a ribbon-like form, which form stronger inter-fiber bonds. Refining further "activates" the long fibers by unraveling fibrils and delaminating the cell walls.

Kraft is by far the most common pulping process for packaging papers and paperboard. *Kraft paper* is the plain brown paper used to make shopping bags, shipping sacks, and the liners for corrugated fiberboard, applications that take advantage of its strength. Bleached kraft pulp is used to make the *solid bleached sulfate* (*SBS*) board used in high-quality white folding cartons, especially for food applications where the board is exposed to wet conditions.

The kraft process was invented by C.F. Dahl in Germany in 1884 by adding sodium sulfide to the cooking liquor in the soda pulping process. This dramatically accelerated delignification and produced a pulp with stronger fibers. Since it was easy to convert existing soda mills to kraft mills, they were competitive with the sulfite mills, although sulfite pulp predominated for many years longer.

Today, 95% of all chemical pulping uses the kraft process. It surpassed the sulfite process in the 1950s once a better system was developed for recovering the chemicals and energy, and chlorine dioxide bleaching was developed.

The kraft process uses an alkaline solution, so it operates at a high pH, in contrast to the sulfite process, which is acid. The *cooking liquor* changes chemical composition and changes colors from white to black as it moves through the processing and recovery process. Although most waste products are recovered and reused, the kraft process is also responsible for bad smells, primarily organic sulfide gases, which cause environmental concern.

Kraft pulping uses a solution of sodium hydroxide (NaOH) and sodium sulfide (Na_2S), known as *white liquor*. The alkali attacks and fragments the lignin molecules into segments with salts that are soluble in the cooking liquor. Pulping is carried out at a maximum temperature of 170–175°C, with a total pulping time of 2-1/4 to 3 hours. A typical digester is 45–55 feet (14–17 m) high and 11–12 feet (3.4–3.7 m) in diameter. In the initial part of the cook, while the temperature is still increasing, most of the alkali is consumed by the carbohydrates and little lignin is removed. Lignin removal occurs during the 1–2 hours the pulp is held at its maximum temperature.

After the cooking is completed, the pressure is released and the softened chips are discharged into a large *blow tank*. The sudden release in pressure reduces the chips to fibers. Continuous digesters are also available, in which there is no sudden pressure release in the tank. Instead, chips are fed continually into one end of the large 200 foot (60 m) tall digester, and cool cooked chips, at temperatures below 100ºC, or washed pulp comes out the other.

Then the pulp is screened to remove fragments and washed to remove the residual pulping chemicals, dissolved lignin, and other materials. Kraft pulps tend to be dark brown in color, and the spent cooking liquor is known as *black liquor*.

The recovery of the pulping chemicals from the black liquor involves evaporation to a highly viscous solution, followed by burning in the recovery furnace, using lignin as the fuel. The inorganic smelt of sodium carbonate (Na_2CO_3) and sodium sulfide, recovered at the base of the furnace, is dissolved to form *green liquor*, which is transformed back into *white liquor* by being causticized with reburned lime (CaO). Sodium sulfate (Na_2SO_4) is added to compensate for the sulfur lost in the process, and gives the kraft process its other name, the *sulfate* process.

Along with 80% of the lignin, about half the hemicellulose in the wood and a small amount of the cellulose are also dissolved and lost in a typical kraft pulping process.

A number of different kraft pulp grades are produced. The unbleached grades used for paper bags and linerboard are cooked less for a higher yield and have more lignin than grades that are bleached to make white paper and paperboard.

6.2.3 Semi-chemical Pulping

Semi-chemical processes combine chemical and mechanical methods. Wood chips are partially delignified (to a lesser extent than in chemical pulps) by being first soaked in the cooking chemical and then fed into one end of the digester vessel. There, chemical treatment, pressure, and high temperatures soften the chips. Very little lignin is dissolved. Next, the mechanical action in a disk refiner breaks down the chips into fibers. The pulp is then washed and refined.

The distinction between semi-chemical and chemi-thermomechanical pulping depends on the extent of the chemical treatment. A variety of process variations form essentially a continuum between purely mechanical and purely chemical pulping processes. In general, processes with more chemical treatment will have lower yields, as they involve greater removal of lignin and other wood components.

Semi-chemical paper is generally stronger than that from mechanical pulp, but not as strong as paper from chemical pulp, and has an intermediate yield. The pulps have a number of end uses and some unique properties. For example, the higher yield pulps produce stiff paper, ideally suited for the fluted medium in corrugated board.

Three common variations are neutral sulfite semi-chemical, high-yield sulfite, and high-yield kraft. The *high-yield sulfite* and *high-yield kraft* processes, as the names imply, involve less cooking and more mechanical processing than the ordinary sulfite and kraft processes. High-yield kraft is most commonly used to make linerboard for corrugated board.

The *neutral sulfite semi-chemical process* (*NSSC*) is used on hardwoods

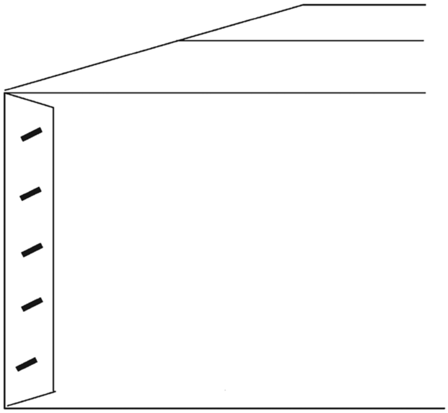

FIGURE 15.5. *Stitched joints should have staples at an angle.*

unlapped, taped joint is the least strong, but since there is no double-thick joint, the knocked-down boxes lay flat with no bulge on the palletload.

A stitched (stapled) joint is often used for large and heavy boxes with flowable non-food contents, since a glue bond is limited by the internal bonding strength of the board. To maximize the strength of the stitching, the staples should be at an angle to the box edge, flutes, and the machine direction of the paper, as shown in Figure 15.5. Stitching is expensive because it is usually done off-line and is slow (although modules can be added to flexo folder-gluers; this is more popular outside North America). Stitching is not used when the contents could be damaged by the staples (for example, food or a liquid-filled bag-in-box). It is also avoided as a method for closing boxes when the staples could pose a danger for the person opening the box.

15.2 COMMON CORRUGATED BOX STYLES

There are a number of standard box styles. They are designated by name (such as *regular slotted container*), acronym (like *RSC*), and by an International Fibreboard Case Code (e.g., #0201). The Case Code has been developed by the FEFCO (the European Federation of Corrugated Board Manufacturers (also known as the Fédération Européenne des Fabricants de Carton Ondule) and EBSCO (European Solid Board Organization). It has also been adopted by ICCA (the International Corrugated Case Association). The American FBA (Fibre Box Association) publishes the codes in its Fibre Box Handbook (FBA 2005). This chapter refers to the International Case Code numbers and their common names in the United States.

There are five basic forms: slotted containers, telescope boxes, folders, rigid (Bliss) boxes, and self-erecting boxes. Corrugated board can also be used to make display stands, pallets, and slipsheets. Some common forms of these are described next.

5.2.1 Regular Slotted Container

The RSC is the most popular and basic box style, shown in Figure 15.1. It is inexpensive and strong. The RSC is the most economical box style; there is very little manufacturing scrap because all flaps are the same length, one-half of the container's width. The straight-line scoring, slotting, and folding is a less expensive process than die cutting.

Since most boxes have a shorter width than length, this means that the flaps on the long sides meet at the center when closed, but the flaps on the short sides do not. The flaps that meet are always closed second, on the exterior where they can be securely sealed. The International Case Code for RSCs is #0201.

The most economical RSC in terms of material usage has proportions $L{:}W{:}D = 2{:}1{:}2$. This uses the least square footage of board for a given cubic volume (the greatest volume for a given square footage of board), and minimizes the size of the flaps. These dimensions result in a square front face and boxes that interlock efficiently.

Example:

What are the dimensions of an RSC containing 4 cubic feet that uses the least amount of C-flute?

$$L{:}W{:}D = 2{:}1{:}2$$
Let, $W = \text{unknown}$
Then, $L = 2W$
$$D = 2W$$
$$\text{Vol} = LWD = 2W(W)(2W) = 4W^3 = 4$$
$$W = 1,\ L = 2,\ D = 2$$

Of course, there are many considerations besides just minimizing the amount of board, especially since the contents have dimensions of their own based on merchandising considerations and packing geometry. For example, cylindrical products sold by the dozen are usually packed in a 3 × 4 configuration. Other dimensional considerations include the width of the board web (sometimes a small change in dimensions can reduce scrap) and optimizing pallet patterns.

15.2.2 Other Slotted Container Styles: HSC, CSSC, OSC, and FOL

The *half slotted container* (*HSC*) is the same as the RSC, but it has an open top with no flaps, as shown in Figure 15.6.

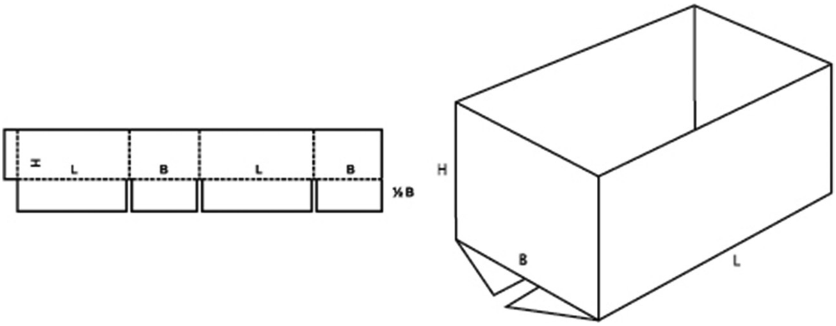

FIGURE 15.6. *Half slotted container (HSC) #0200. Reprinted with permission of FEFCO, copyright 2007.*

The *center special slotted container* (*CSSC*) is like the RSC except all of its flaps meet at the center, as shown in Figure 15.7. Since most boxes have a shorter width than length, this means that the flaps on the short sides must be longer than those on the long sides in order to meet in the center when closed. Therefore, this style uses more material and creates more manufacturing waste than the RSC, due to the blank having longer flaps on two panels and wasting a strip of scrap on the other two.

The chief advantage of the CSSC style is its flat top and bottom, since both the top and bottom have a full double thickness of corrugated board, providing a level base for the products inside. It is also a more squared-up style, because making the flaps all meet reduces the possibility of parallelogramming when closed. Side-to-side compression strength increases substantially compared to an RSC because all flaps meet.

There are several variations on the CSSC style. In the *side special slotted*

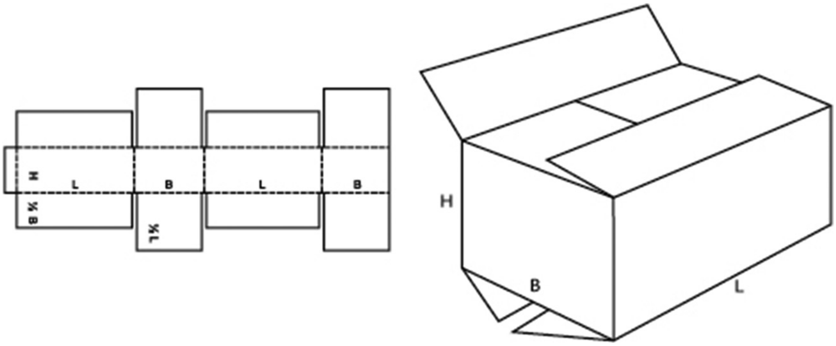

FIGURE 15.7. *Center special slotted container (CSSC) #0204. Reprinted with permission of FEFCO, copyright 2007.*

container (*SSS*) all pairs of flaps meet, but not at the center of the box. The *center special overlap slotted container* (*CSO*) and *center special full overlap slotted container* (*SFF*) have differential length outer flaps of varying degrees of overlap, with inner flaps that meet in the center.

The *overlap slotted container* (*OSC*) has flaps all of one length (like the RSC) but they are long enough for the outer flaps to overlap, as shown in Figure 15.8. The overlapping flaps are often closed with staples. This is a style that is good for long products where there is a long gap between the inner flaps, because the sealed overlap prevents the outer flaps from pulling apart.

The *full overlap slotted container* (*FOL*) has all flaps the same length as the width of the box, with the outer flaps coming within one inch of complete overlap. It is similar to the OSC except with more overlap, as shown in Figure 15.9.

The FOL is a particularly strong box that stands up to rough handling. The extra layers of board add cushioning. It also has good strength when stacked on its side, since the full overlap flaps can provide compression strength to make up for the loss of compression strength when flutes are horizontal. It is also an expensive style that uses much more corrugated fiberboard than does a common RSC.

The slotted container that uses the least board doesn't even have a Case Code number. Called a *gap-flap* box, none of the flaps meet, leaving a gap in the center. This is used for products or consumer packages, like cereal cartons, that help to provide compression strength and have a dimension such that they won't fall through the gap. The gap-flap style is even more economical than an RSC. It is easy to open without a box-cutter because the gap gives a place to grip the flap and pull it open. It does require a special casing machine capable of gluing the partial flaps the right amount in the right place.

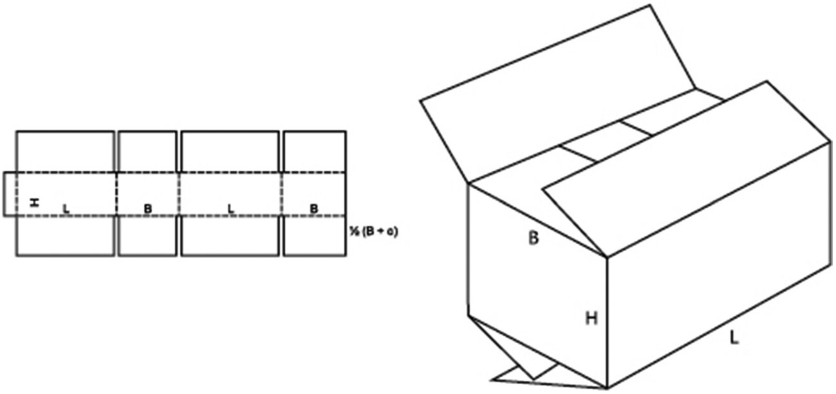

FIGURE 15.8. *Overlap slotted container (OSC) #0202. Reprinted with permission of FEFCO, copyright 2007.*

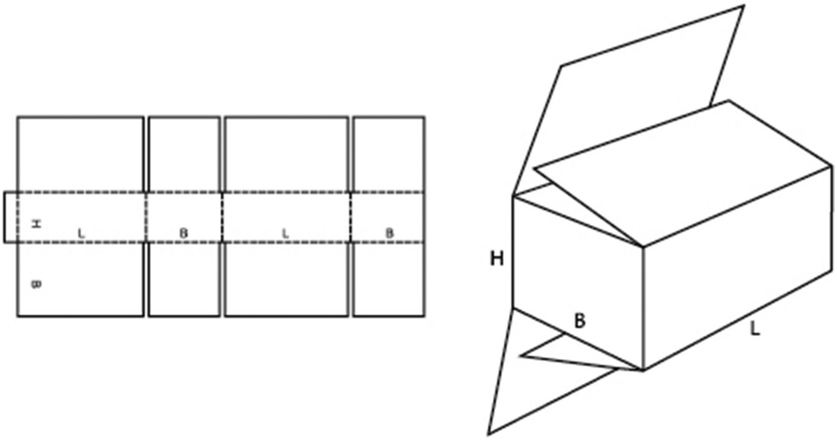

FIGURE 15.9. *Full overlap slotted container (FOL) #0203. Reprinted with permission of FEFCO, copyright 2007.*

15.2.3 Telescope Styles

Telescope style boxes have a separate top that fits over the bottom. The truck and rail classifications call these *telescope boxes* if the cover extends over two-thirds of the way down the sides and *boxes with covers* if the cover is shorter.

Full telescope boxes with the cover the same depth as the bottom are used for produce, like bananas, where they can provide very good compression strength and bulge resistance due to the double layer of sidewalls. Full telescope boxes are favored for reuse because they are strong and easy to repeatedly open and reclose.

Partial telescope boxes and boxes with covers may depend on the sidewalls of the bottom box for compression strength. On the other hand, as in boxes used for reams of office paper, the box can be filled higher than the level of its sidewalls with the cover resting on the contents rather than the sidewalls. Only sturdy and square contents like office paper will support such a topload.

It takes two blanks to make a telescope style box. The bottom one must have a slightly smaller footprint than the top to ensure a good fit. There are two styles for the blanks. Two trays are used to make the *full telescope design* (*FTD*) and *design style with cover* (*DSC*). The second, the *full telescope half slotted* (*FTHS*) style, is made from two half slotted containers (HSCs). These styles are shown in Figure 15.10.

The FTHS style is key to the marketing of bananas. Most banana boxes today are full telescope style, but with short gap-flaps. The telescope style is needed to give compression strength, since the banana shape does not help to support the load. The flap gap helps to facilitate air flow, which is crucial because bananas are ripened by the application of ethylene gas. They are gassed in the box, in transit or storage chambers, to trigger ripening at the right time to be sold. The box also makes it easy to check for ripeness because it can be reclosed.

Furthermore, most banana boxes continue to bravely serve after their tour of banana duty. Most of them are reused, primarily as boxes for salvaged and unsalable goods in grocery reverse logistics operations, where they are favored for their large numbers, uniformity, and reclosability.

15.2.4 Folders and Wrap-Around Cases

Folders and *wrap-around cases* are formed from a single blank that is scored to fold up around a product, as shown in Figure 15.11. The most common types are variations on a *five panel folder*. The fifth panel completely covers one side. In addition, the closed box can have overlapped layers of flaps on each end, which gives good stacking strength. Five-panel folders are used

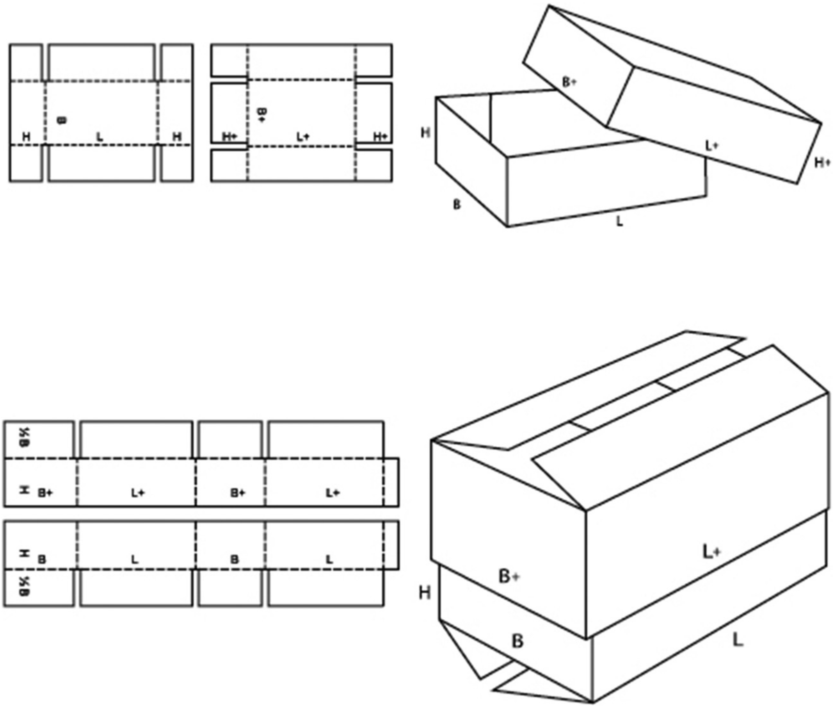

FIGURE 15.10. *Full telescope design (FTD) #0301 style and full telescope half slotted (FTHS) #0320 styles. Reprinted with permission of FEFCO, copyright 2007.*

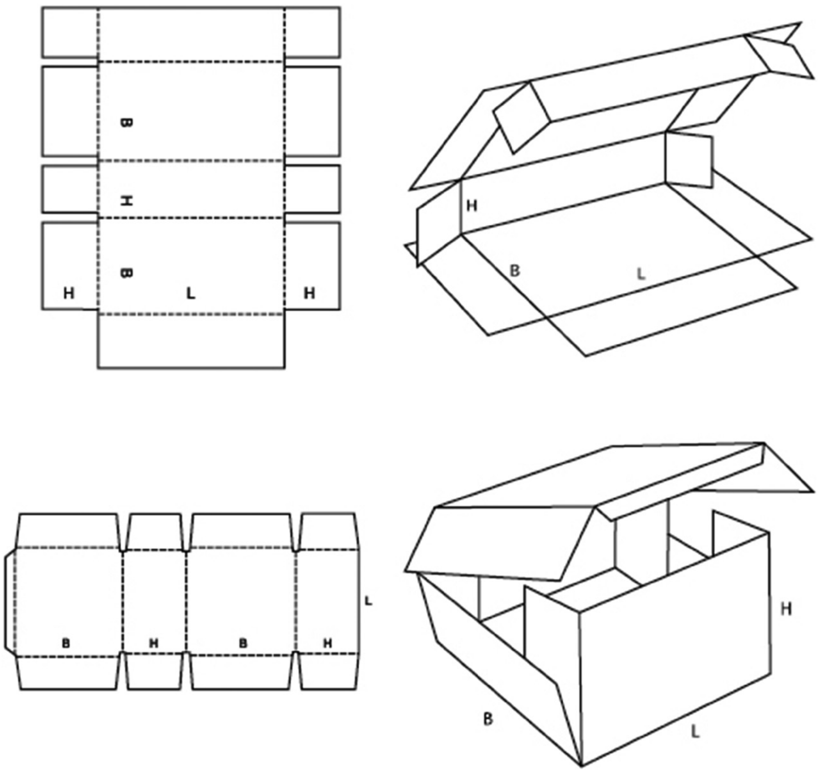

FIGURE 15.11. Five-panel folder (#0410) and wrap around blank (#0406). Reprinted with permission of FEFCO, copyright 2007.

mostly for packages in which the depth is the shortest dimension, especially for long products like vinyl siding.

A *wrap-around blank* is similar, but in place of the fifth panel it has a shorter manufacturer's joint. Wrap-around cases are formed in a machine that wraps the blank around the product and glues the end flaps and joint. Hot melt adhesive is used since it must be set before the box can be handled or stacked.

Wrap-around cases are typically less expensive than RSCs because they use less board for the same volume of product. This is because the flaps are on the smaller ends, rather than the top.

A wrap-around case provides a tighter pack than an RSC, because the RSC needs to be slightly larger in order to give room for filling. The wrap-around case's tightness is a virtue for products like cans and jars because it reduces the void space that allows them to bang together inside a case that is dropped. Wrap-around cases provide less compression strength than RSCs because some flutes are horizontal, but they are commonly used for sturdy products like cans and jars that provide enough strength on their own for stacking.

There are two folder styles designed for books in small parcel shipping, shown in Figure 15.12. These rely on the book to provide much of the strength in the package, with #0403 adding a cell on two ends for added protection.

15.2.5 Bliss Boxes

Blessed with the happiest name in the box world, the *rigid*, or *Bliss box*, is made from three pieces of solid fiberboard: two side panels and a body that folds around them to form the other sides, bottom, and top, as shown in Figure 15.13.

The side panels are glued using special equipment to make the six or more joints at the packer/filler's plant. Once the joints have been sealed, the box cannot be knocked down, hence the name *rigid box*. They are also known as *recessed end boxes*. This style is sometimes used to make solid fiberboard beer cases.

Although the Bliss box was originally made from solid fiberboard, they are now typically made from corrugated fiberboard and are used in the grocery industry, sometimes without tops for point of purchase displays. With no flaps on

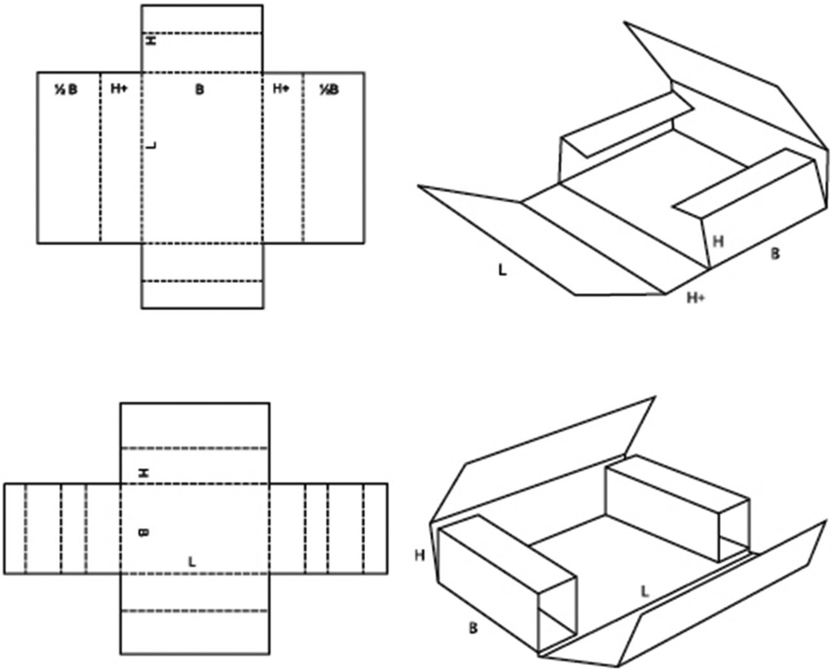

FIGURE 15.12. *One piece folder (OPF) #0401 and OPF with cell end buffers #0403.*

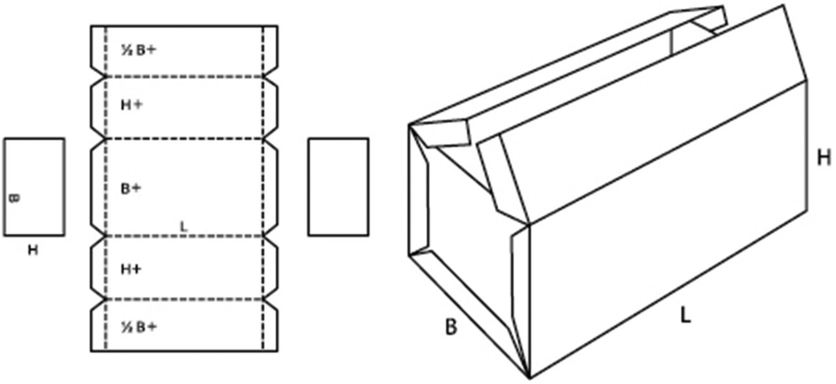

FIGURE 15.13. Bliss box also known as rigid box (#0606). Reprinted with permission of FEFCO, copyright 2007.

the bottom, this style uses less board than an RSC and has good compression strength along the joints. There are several variations of the style, including one without a top.

15.2.6 Self-Erecting and Snap-Bottom Boxes

Self-erecting and *snap-bottom boxes* have die-cut bottoms that cleverly fit together and/or are pre-glued in such a way that the packer-filler can manually erect the bottom of the box without using any adhesive or equipment. Such designs are especially useful for small scale operations that cannot justify the investment in equipment for automatically erecting boxes and find that it is too labor-intensive to manually erect and secure the bottom of RSCs.

Self-erecting boxes have a pre-glued automatic bottom that simply folds into place. Snap bottom (also known as *1-2-3*) boxes have a bottom that interlocks in a 3-part process: the largest flap is folded in first, then the two side flaps, and the final flap locks everything into place. Figure 15.14 shows these styles. The tops of these boxes can be RSC-style or tucked.

15.2.7 Fresh Produce Trays

The *fresh produce tray* is an open-top shipping container and display tray for fresh fruits and vegetables. The tray is formed in the field in tray-forming equipment that erects the tray and glues together the corners. There are some unglued, self-locking designs, but they lack the stability of glued corners. A typical produce tray is shown in Figure 15.15.

Sometimes called the *common corrugated footprint tray* (*CCF*), most have

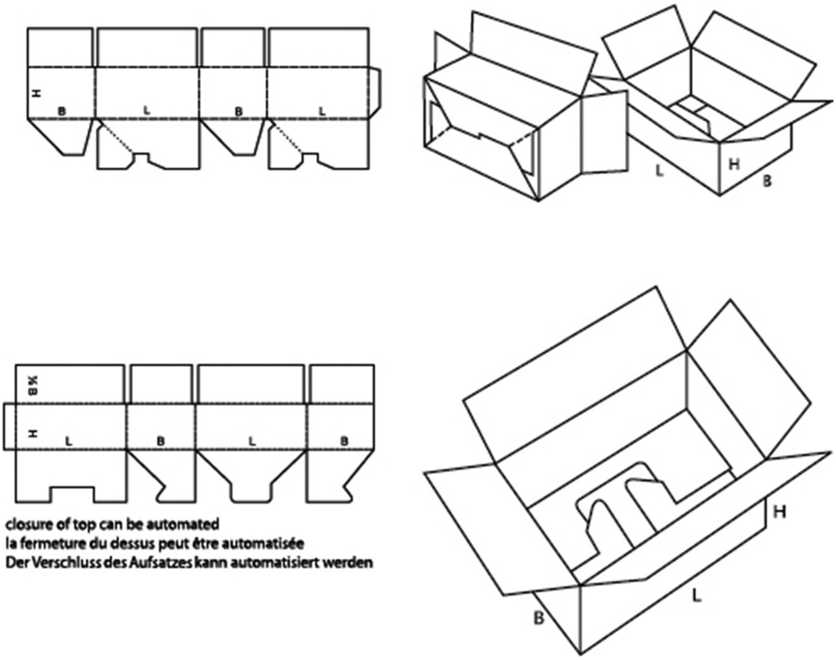

closure of top can be automated
la fermeture du dessus peut être automatisée
Der Verschluss des Aufsatzes kann automatisiert werden

FIGURE 15.14. *Self-erecting (#0711) and snap bottom (#0216) boxes. Reprinted with permission of FEFCO, copyright 2007.*

a standard footprint of 60 cm x 40 cm (23-1/2″ × 15-11/16″). The standard outside *L* × *W* dimensions are supported by the International Standards Organization (ISO 3394 2012), the U.S. Fibre Box Association (FBA 2013), and the European Federation of Corrugated Board Manufacturers (FEFCO 2008).

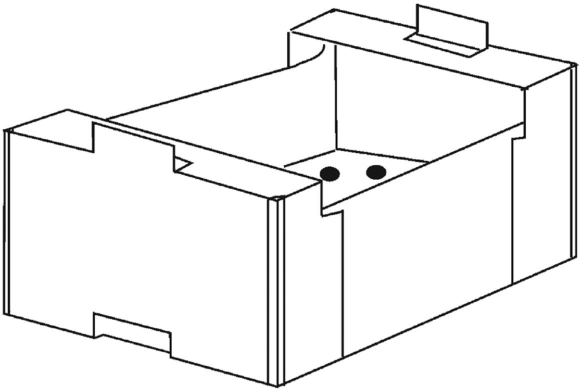

FIGURE 15.15. *Produce tray.*

This common footprint fits “five down” on a standard 48″ × 40″ U.S. pallet or a standard 120 × 100 cm international pallet, or four down on a standard 120 × 80 cm Europallet. The depth can be varied to suit the product depending on the dimensions, weight, and demand for the product, to optimize shipping density and protection.

The standards also include a half-size, 40 × 30 cm (15-11/16″ × 11-11/16″) (and a quarter-size that is rarely used). Products most appropriate for the 40 × 30 cm tray are generally smaller, with a lower level of demand, like mangos, avocados, papayas, strawberries, passion fruit, mushrooms, okra, hot peppers, figs, and limes (ITC 2002).

The footprint dimensions were chosen to match the international standard size for reusable plastic produce containers (RPCs), with which they compete. As a result, the two types of containers, and many varieties of produce sourced from anywhere in the world, can fit together in a modular system. They make tidy and standard mixed palletloads and displays, and can be automatically sorted in distribution centers. They facilitate international trade.

The trays have features to facilitate stacking and display. Some styles have a narrow support shelf along two top edges, which can be colorfully printed to add brand identity in a store display. They have standard-positioned interlocking tabs on top and matching slots on the bottom, 2-1/2″ (64 mm) wide × 5/8″ (16 mm), to better secure a column stack and prevent sliding. While most are open-top, there are also styles with flap or full telescope covers. Above all, they are designed to prevent “nesting,” which in this case means that the geometry and features need to provide enough compression strength so that the containers do not “nest” into the container immediately below forcing the produce itself to carry the weight of the stack.

Retailers rely on the standard footprint for building modular displays. An empty tray can be easily swapped for a full one, which improves the retailer’s stocking productivity, especially on a busy shopping day. The ability of the CCF trays to carry colorful graphics is a distinct advantage over the equivalent reusable plastic containers, giving a means for branding and advertising.

Produce trays also need to facilitate cooling and maintain their strength under very humid conditions. They may be filled in the field where it is wet, the produce transfers its own moisture to the board, and condensation is common during transfer across a loading dock. Ventilation cut-outs are necessary for quick chilling, but they weaken the board. Wet strength paper, wax coating, and water-resistant adhesive are often used because of the high moisture content of fresh produce.

FEFCO and FBA have designated a special voluntary mark for trays that meet their standard criteria. The criteria can be found in the technical specifications on their websites (FBA 2000, FEFCO 2008). The CCF criteria, however, are very general and the specific design, combination of board, and features can vary.

The Spanish corrugated board industry (the Asociación Española de Fabricantes de Cartón Ondulado) has developed some of the most comprehensive designs for produce trays. Their *Plaform* proprietary licensed system has recommended constructions and test methods including vibration, compression, and bottom-sag. The standards result in tray specifications tailored to the characteristics of the type of produce. For example, a tray for heavy tropical pineapples would have a stronger board combination than would a tray for lightweight raspberries in plastic clamshells. Trays for wetter produce have more waxed plies than do those for dry products (AEFCO 2009).

15.2.8 Point of Purchase Displays

Point of purchase (*POP*) *displays* are gaining popularity. They can be a powerful advertising medium, attracting shoppers at the moment when they are most ready to buy. Manufacturers increasingly use highly-decorated corrugated board to provide a frame to showcase and advertise their products in the store. This trend has stimulated the development of higher-value four- and six-color printing on corrugated board.

Display trays are made from a solid bottom piece of corrugated board with its edges folded up to form sidewalls and its corners joined. The top is usually open, although a cover can be attached. There are many variations. The sidewalls can be short, as in the short one inch- high trays that are used to provide a solid bottom for a shrink-wrapped case of cans and bottles. Or they can be tall, as in the trays used in telescoping boxes.

One of the most common types of display trays used in the grocery industry is shown in Figure 15.16. It has high sidewalls on the two long sides and corners to provide support to the products within, and it has low walls on the ends to make the products easy to see.

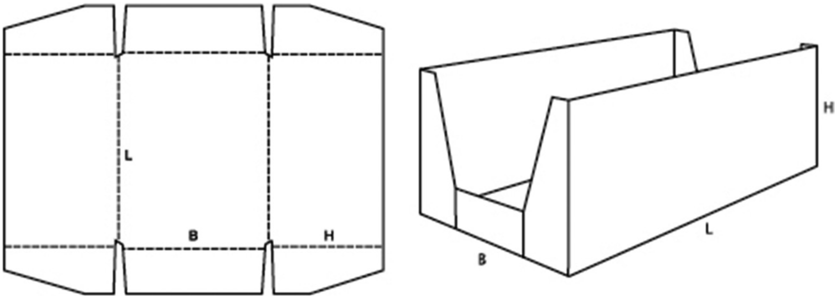

FIGURE 15.16. *Display tray (#0460). Reprinted with permission of FEFCO, copyright 2007.*

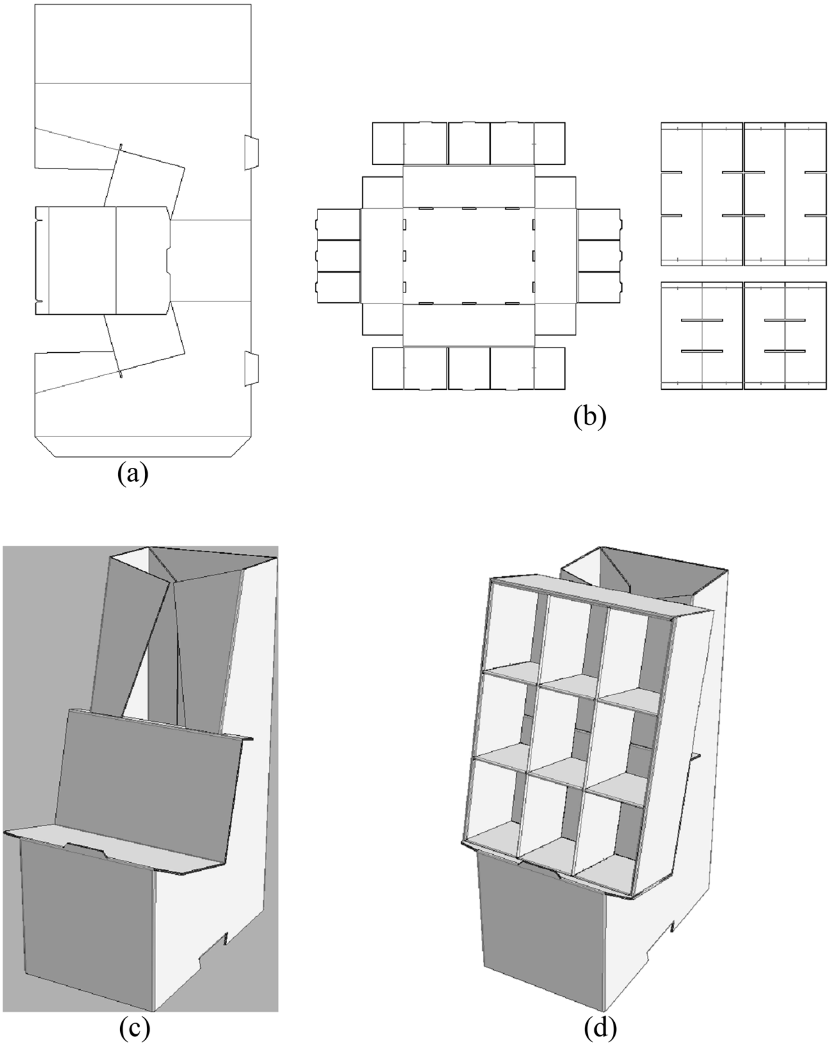

FIGURE 15.17. *POP display and stand: (a) Base; (b) Tray; (c) Assembled base; (d) Assembled display. Reprinted by permission from Dennis Young, 2014.*

Display trays are used in the store to form end-of-aisle displays and are common in high volume discount stores. They cut the cost of building displays because there is not a top to remove and the product can be displayed right in the case. In many cases, full or partial palletload displays are assembled by the supplier, and the retailer has only to set it on the floor for a pre-built display.

Stand-alone POP displays, like that shown in Figure 15.17, are used for special promotions. They are used in stores for a few weeks, and the stock may or may not be replenished as it is sold. They present the product at the ideal level, between eye and waist-high.

Stand-alone POP displays must be easy to set up since they may be set up by a retail worker in the store, who is unfamiliar with how to do it. The instructions and method are in the grand tradition of "Tab A in Slot B," which can be confusing in the best of circumstances, so a simple design has the best chance of success.

The corrugated display stand is designed to hold trays that are refilled, or to hold a shipping container that has been suitably opened and mounted. The stand needs to be easy to maintain and sturdy to resist humidity and abuse. Most have bases and headers that have the highest quality printing.

There is no standard style display stand which has given rise to some very clever designs. Examples can be found in publications like *Out of the Box* (Lianshun and Lang 2008) and *Package and P.O.P. Structures* (Dhairya 2007), which also include templates on a CD-ROM that can be used for CAD design on most operating systems.

15.2.9 Intermediate Bulk Containers (IBCs)

Intermediate bulk containers (*IBC*s) are large boxes used to ship up to approximately 1 ton. As the name implies, they are in between a bulk shipping mode (like tanks and hopper cars) and smaller manually handled bags and boxes. Most are attached to a pallet. IBCs are used primarily for industrial products, ranging from resin pellets to assembly parts, shipped to factories.

Most IBCs are made from double- or triple-wall corrugated board. The most common style, shown in Figure 15.18, is a large HSC with a separate cap that is held to the pallet by steel or plastic bands. Some people refer to them by the nickname *Gaylord*, which was the name of a company that once made many of them but no longer exists.

IBCs can also be made in hexagonal and octagonal shapes, similar to fiber drums, which gives greater stacking strength. There are also IBCs made from steel and plastic, as well as flexible IBCs (*FIBC*s) made from woven fabric (primarily polypropylene).

A style closely related to the IBC and to the telescoping style is the tube-and-cap design shown in Figure 15.19, used for appliances, furniture, and assembly parts. It is made from three corrugated parts—a base, a tube, and a cap—and a pallet. The corrugated tray is placed on the pallet, the product is placed in the tray, the tube of corrugated board is pulled down around the product and fitted into the tray, and the cap, which is also in the form of a tray, is put on top and strapped down. There is a similar package used for large ap-

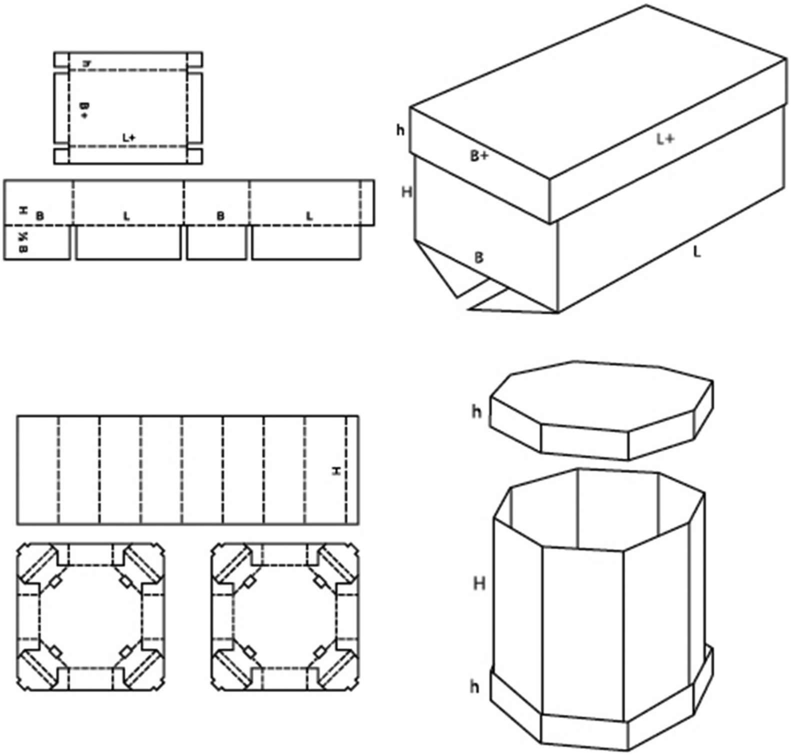

FIGURE 15.18. Intermediate bulk containers (#0312 and #0351). Reprinted with permission of FEFCO, copyright 2007.

pliances, called a *baseloid*, in which the top cap is more securely attached and used as a lifting assist.

15.2.10 Corrugated Boxes for Extreme Environments

When corrugated board is expected to perform in extreme situations, especially when water and weather resistance is needed, a higher standard of specification is required. The U.S. government (General Services Administration and Department of Defense) during World War II developed a special series of weatherproof and waterproof containers (Lincoln 1945). Although most of the constructions would not be acceptable today from an environmental point of view (because of asphalt impregnation and rubber adhesives), they have left a legacy of test methods and specifications.

Today, more acceptable wet strength and water resistant treatments and adhesives have been developed, and the government standards have been now transferred to ASTM. The only things that have not changed are the names; they go by the V (weatherproof, but also for “victory”), and W (water resistant) series, with names like V3c and W5c. The standards are:

- ASTM D4727/D4727M: Corrugated and Solid Fiberboard Sheet Stock
- ASTM D5118/D5118M: Fabrication of Fiberboard Shipping Containers

These two standards also reference the test standards for boxes used in extreme situations, like water and fire resistance.

V- and W-board are primarily used for military applications. The organization to which the military packaging professionals belong is the National Institute of Packaging, Handling, and Logistics Engineers (www.niphle.org).

15.2.11 Other Creative Corrugated Fiberboard Containers

There are many other container designs possible using corrugated fiberboard. The standard styles are popular primarily because they are easy to make and fill using standard equipment.

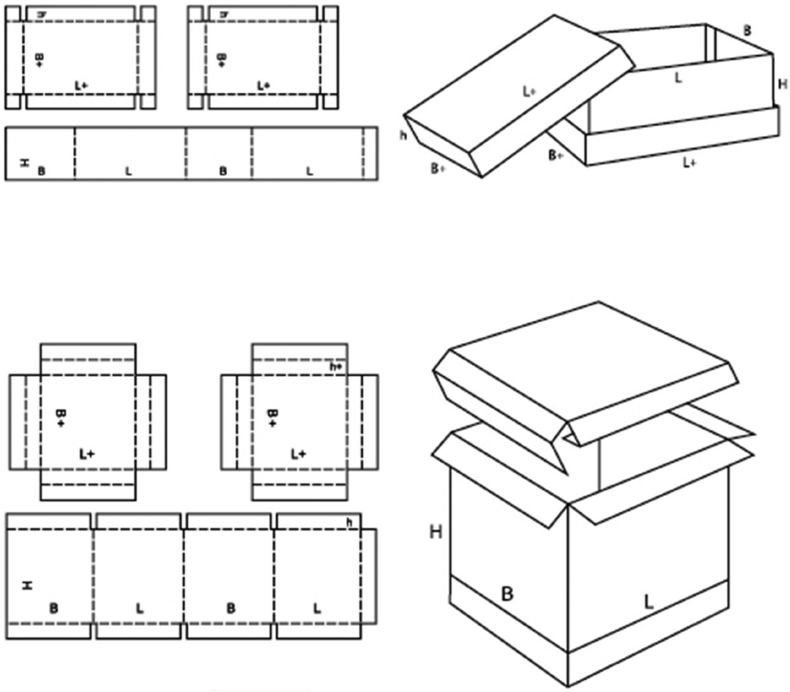

FIGURE 15.19. Tube-and-cap and baseloid designs (#0310 and #0325). Reprinted with permission of FEFCO, copyright 2007.

INDEX